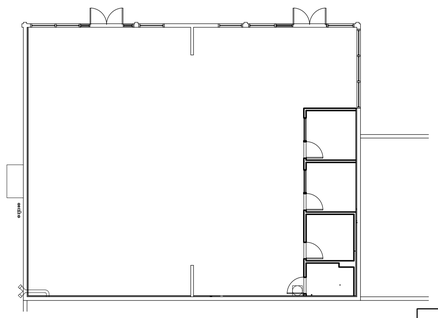

THIS DRAWING IS FOR REFERENCE ONLY

TENANT IMPROVEMENT

BUILDING INFORMATION:

ADDRESS:

STREET ADDRESS: 5414 LA PALMA AVE.
CITY: LA PALMA

STRUCTURE:

WOOD AND CMU LOAD BEARING WALLS, WOOD ROOF FRAMING

BUILDING CODE:

BUILDING CODE EDITION:	2013 CALIFORNIA BUILDING CODE
MECHANICAL CODE EDITION:	2013 CALIFORNIA MECHANICAL CODE
ELECTRICAL CODE EDITION:	2013 CALIFORNIA ELECTRICAL CODE
PLUMBING CODE EDITION:	2013 CALIFORNIA PLUMBING CODE
ADDITIONAL CODE EDITION:	2013 CALIFORNIA ENERGY CODE 2013 CALIFORNIA FIRE CODE

BUILDING DATA:

OCCUPANCY:	A-3
CONSTRUCTION TYPE:	III B
NUMBER OF STORIES:	1
EXISTING BUILDING HEIGHT:	15'-0"
EXISTING BUILDING AREA:	2,924 S.F.
OCCUPANCY SEPARATION A-M:	2 HOUR FIRE BARRIER

DESIGN LOADS:

GROUND SNOW LOAD:	0
WIND LOAD:	BASIC WIND SPEED = 85 MPH
	WIND EXPOSURE = C
SEISMIC DESIGN CATEGORY:	D
SOILS BEARING CAPACITY:	1500 PSF

LIFE SAFETY SYSTEM:

EMERGENCY LIGHTING:	X YES	___ NO
EXIT SIGNS:	X YES	___ NO
FIRE ALARM AND SMOKE DETECTION SYSTEM:	___ YES	X NO
PANIC HARDWARE:	X YES	___ NO
FIRE SPRINKLERS:	___ YES	X NO

PARKING ANALYSIS:

EXISTING PARKING SPACES: 17 SPACES

ACCESSIBLE PARKING SPACES REQUIRED: 1 SPACE VAN ACCESSIBLE

CONSULTANTS:

ARCHITECT:	Design UA	12830 Valley View Street Suite C, Garden Grove, CA 92845
STRUCTURAL:	VP Engineering	12830 Valley View Street Suite C, Garden Grove, CA 92845
ELECTRICAL:	L4 ENGINEERING	12832 Valley View St. Ste.D Garden Grove CA 92845
PLUMBING	PJP Engineering, Inc.	13231 Acoro Place, Cerritos, CA 90703
MECHANICAL	PJP Engineering, Inc.	13231 Acoro Place, Cerritos, CA 90703

TENANT INFORMATION:

OWNER: CITY OF LA PALMA — 7822 Walker St., La Palma, CA 90623
Phone: (714) 690-3322

REVISIONS

DRAWING INDEX

CV1.0 COVER SHEET
CV1.1 ADA NOTES
GR-1 GREEN BUILDING

ARCHITECTURAL

A0.1 EXISTING SITE PLAN
A0.2 LOT SITE
D1.0 DEMOLITION FLOOR PLAN
A1.0 NEW FLOOR PLAN
A1.2 REFLECTED CEILING PLAN
A2.0 DEMOLITION AND PROPOSED EXTERIOR ELEVATIONS
A3.0 ENLARGE RESTROOM
A4.0 DOOR/WINDOW SCHEDULE
A5.0 DOOR/WINDOW DETAILS

STRUCTURAL

s-0 STRUCTURAL GENERAL NOTES
S-1 FOUNDATION PLAN
S-2 ROOF FRAMING PLAN
S-3 DETAILS

ELECTRICAL

E-1 ELECTRICAL SYMBOL LIST/LIGHTING FIXTURE SCHEDULE
E-2 ELECTRICAL LIGHTING PLAN
E-3 ELECTRICAL POWER PLAN
E-4 INDOOR TITLE 24 FORM

PLUMBING

P1 PLUMBING GENERAL NOTES
P2 FLOOR PLAN

MECHANICAL

M1 MECHANICAL GENERAL NOTES
M2 FLOOR PLAN

T1.0 INDOOR TITLE 24 FORM
T2.0 INDOOR TITLE 24 FORM

OCCUPANT LOAD CALCULATIONS:

CALIFORNIA BUILDING CODE 2013

CBC 2013 TABLE 1004.1.1
MAXIMUM FLOOR AREA ALLOWANCES PER OCCUPANT

FUNCTION OF SPACE	PER S.F.	AREA SQ. FTG. PER PERSON	OCCUPANT
ACCESSORY AREAS, CIRCULATION, RESTROOMS	0 GROSS	89 S.F.	0 OCCUPANTS
EXERCISE ROOM:	(1/50)	2,595 S.F.	52 OCCUPANTS
OFFICE	(1/100)	181 S.F.	2 OCCUPANTS
STORAGE:	(1/300)	59 S.F.	1 OCCUPANT
TOTAL:		2,924 S.F.	55 OCCUPANTS

PLUMBING FIXTURE CALCULATIOS

2013 CPC TABLE A
OCCUPANT LOAD 1/200 GSF.
2,924 SF./200 = 15 OCCUPANTS
CPC SEC. 422.2 EXCEPTION (3)
TOTAL OCCUPANT LOAD OF 50 OR LESS, INCLUDING CUSTOMERS AND EMPLOYEES, ONE TOILET FACILITY DESIGNED FOR USE BY NO MORE THAN ONE PERSON AT A TIME SHALL BE PERMITTED FOR USE BY BOTH SEXES

SCOPE OF WORK

MODIFICATIONS TO EXISTING INTERIOR BUILDING INCLUDING:

- REMOVE EXISTING INTERIOR OFFICE DOOR, WALL AND WINDOW
- REMOVE EXISTING RESTROOM TO FACILITATE NEW CONSTRUCTION
- REMOVE EXISTING EXTERIOR DOOR/WINDOW TO FACILITATE NEW CONSTRUCTION.
- ADD NEW OFFICE, RESTROOM AND STORAGE ROOM.
- REMOVE AND REPLACE (E) CEILING TILE, (E) GRID TO REMAIN

VICINITY MAP

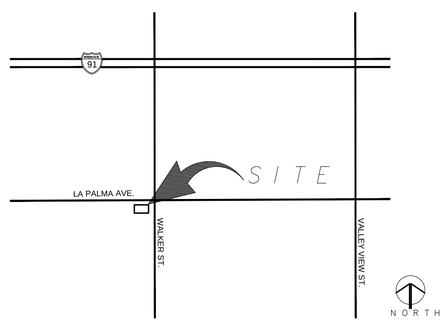

SYMBOL LEGEND:

6 / A4	SECTION TAG	4	DOOR TAG
5 / A6	DETAIL TAG	DINING ROOM 103	ROOM NAME & NUMBER
T/ SLAB ELEV. 0'-0"	ELEVATION TAG	A	PARTITION TAG
6 / A4 DETAIL 1 1/2"=1'-0" DETAIL NUMBER	DRAWING TITLE		

DESIGN ENGINEER'S SEAL & SIGNATURE:

LICENSED ARCHITECT
GARY T. HIPOLITE
No. C13681
January 31, 2017
STATE OF CALIFORNIA

PREPARED UNDER THE SUPERVISION OF:

designua
PLANNING AND DESIGN
12832 Valley View Street | Suite C | Garden Grove | CA | 92845
Phone 714.892-3900 | Fax 714.892-3944

Underground Service Alert
Call: TOLL FREE
1(800) 422-4133
TWO WORKING DAYS BEFORE YOU DIG

REVISIONS

NO.	DESCRIPTION	DATE
PC1	PLAN CHECK CORRECTION	03/30/15
	BID SET	04/10/15

REFERENCES

APPROVED BY:
CITY ENGINEER RCE: DATE:

DATE:	03/09/15
SCALE (H):	
SCALE (V):	
DRAWN BY:	D.L.
CHECKED BY:	G.H.

SHEET TITLE: COVER SHEET

PROJECT NAME AND ADDRESS: 5414 LA PALMA AVE., LA PALMA, CA

CITY PROJECT NO.

SHEET NO. CV1.0 COVER SHEET

SHEET OF

ALL SIGNS SHALL COMPLY WITH SECTION 11B-703, DIVISION 7, CHAPTER 11B OF CBC 2013

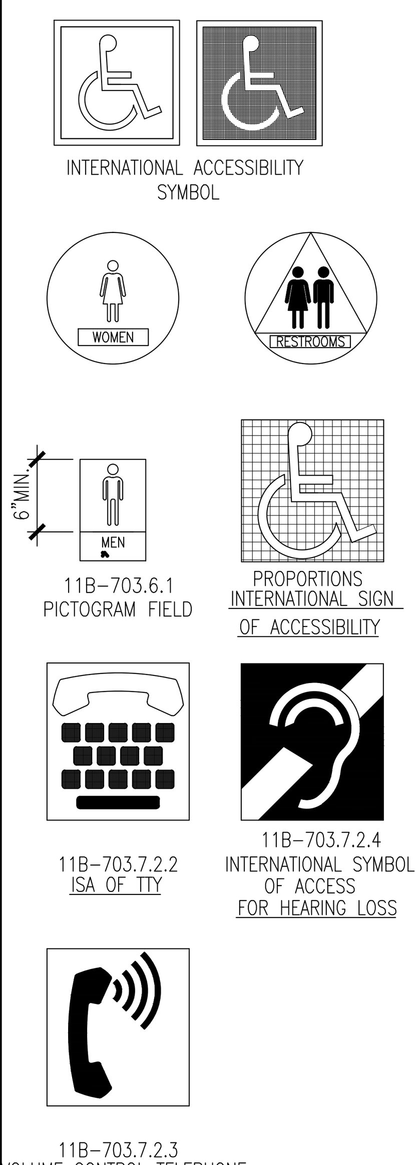

LETTERS AND NUMBERS:

1. WIDTH TO HEIGHT RATIO BETWEEN 3 : 5 AND 1 : 1.
2. STROKE WIDTH TO HEIGHT BETWEEN 1 : 5 AND 1 : 10.
3. CONTRAST CHARACTERS AND SYMBOLS WITH BACKGROUND.
4. SANS SERIF CHARACTERS.

SIGNS / PICTOGRAMS

5. PICTOGRAMS / PICTORIAL SYMBOL SIGNS SHALL BE ACCOMPANIED BY THE EQUIVALENT VERBAL DESCRIPTION PLACED DIRECTLY BELOW THE PICTOGRAM. THE BORDER DIMENSION SHALL BE 6" MINIMUM HEIGHT.
6. CHARACTERS AND BACKGROUNDS SHALL BE OF NON-GLARE CONTRASTING COLORS.
7. SIGNS / PICTOGRAMS SHALL BE INSTALLED ON THE WALL ADJACENT TO DOOR LEADING TO THE ROOM OR SPACE THEY DESCRIBE AND WITHIN 3" OF SIGNAGE WITHOUT ENCOUNTERING PROTRUDING OBJECTS OR STANDING WITHIN THE DOOR SWING AREA.
8. VERTICAL CLEARANCE AT SUSPENDED SIGNS WITH MINIMUM HEADROOM OF 80" REQUIRE MINIMUM 3" CHARACTER HEIGHT MEASURED BY USING UPPERCASE "X". CHARACTERS AND NUMBERS SHALL BE SIZED ACCORDING TO VIEWING DISTANCE FROM WHICH READ. LOWER CASE CHARACTERS PERMITTED.

SIGN LOCATIONS:

9. ALL ACCESSIBLE ENTRANCES IDENTIFIED WITH MINIMUM OF ONE STANDARD SIGN.
10. ADDITIONAL DIRECTIONAL SIGNS ALONG ACCESSIBLE PATH OF TRAVEL ARE REQUIRED.
11. BUILDINGS REMODELED TO PROVIDE ACCESSIBLE SANITARY FACILITIES FOR PUBLIC USE SHALL HAVE INFORMATION POSTED IN THE LOBBY AS PART OF THE BUILDING DIRECTORY.

INTERNATIONAL SYMBOL OF ACCESSIBILITY:

12. STANDARD USED TO IDENTIFY ACCESSIBLE FACILITIES.
13. WHITE FIGURE ON BLUE BACKGROUND, COLOR # 15090 ON FEDERAL STANDARD # 595A.
14. WHEN ENFORCING AGENCY DETERMINES, IF APPROPRIATE, SPECIAL DESIGNS AND COLORS MAY BE APPROVED.

BRAILLE:

15. USE CONTRACTED GRADE 2 BRAILLE. DOTS TO BE 0.1 INCH ON CENTER IN EACH CELL.
16. 0.2 INCH SPACE BETWEEN CELLS.
17. DOTS RAISED MINIMUM 0.025 INCH ABOVE BACKGROUND.
18. CHARACTERS SHALL BE SANS SERIF UPPER CASE ACCOMPANIED BY GRADE 2 BRAILLE ANS SIZED

SIGNS/PICTOGRAMS (7)

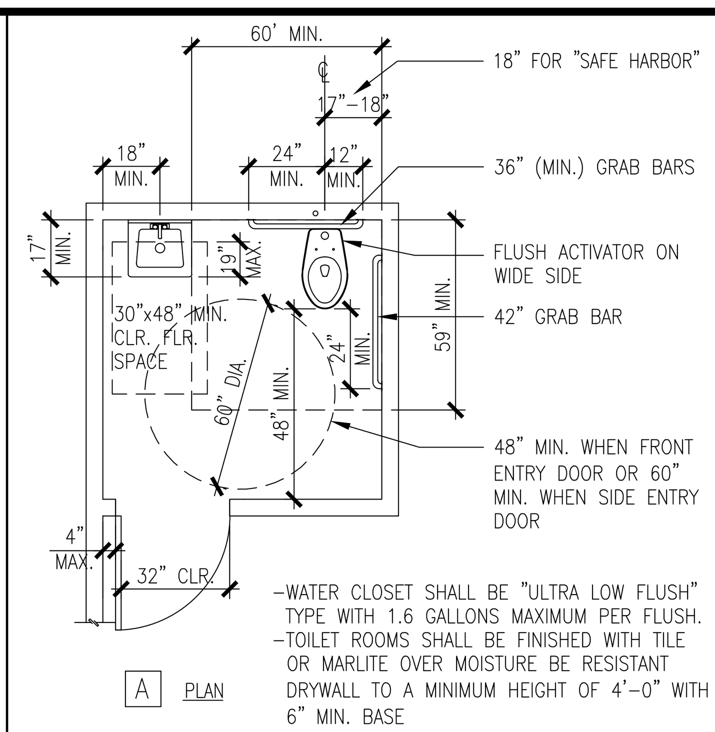

-WATER CLOSET SHALL BE "ULTRA LOW FLUSH" TYPE WITH 1.6 GALLONS MAXIMUM PER FLUSH.
-TOILET ROOMS SHALL BE FINISHED WITH TILE OR MARLITE OVER MOISTURE BE RESISTANT DRYWALL TO A MINIMUM HEIGHT OF 4'-0" WITH 6" MIN. BASE

A PLAN

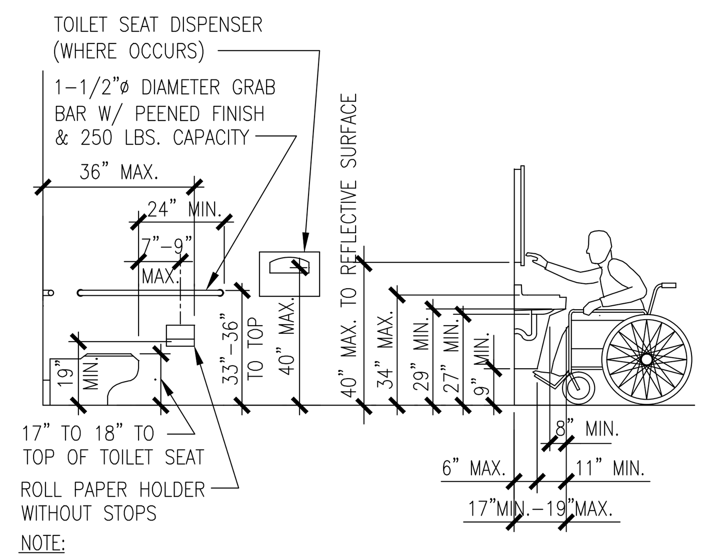

NOTE:
PROVIDE PRIVACY DOOR LOCK WHEN IT IS A PRIVATE TOILET OR FOR UNISEX USE.

B ELEVATIONS

PRIVACY/UNISEX TOILET ROOM (4)

DOOR TYPE:

1. MINIMUM 10" HIGH SMOOTH SURFACE AT DOOR BOTTOM, EITHER ATTACHED PANEL OR BOTTOM RAIL.

HARDWARE:

2. OPENABLE FROM INSIDE WITHOUT USE OF KEY OR SPECIAL KNOWLEDGE OR EFFORT.
3. OPENABLE BY SINGLE EFFORT LEVER-TYPE DEVICE (NOT REQUIRING GRASPING).
4. MOUNTED 36" TO 42".
5. MAXIMUM 5 LBS. EFFORT TO OPERATE EXTERIOR DOOR, 5 LBS. FOR INTERIOR.

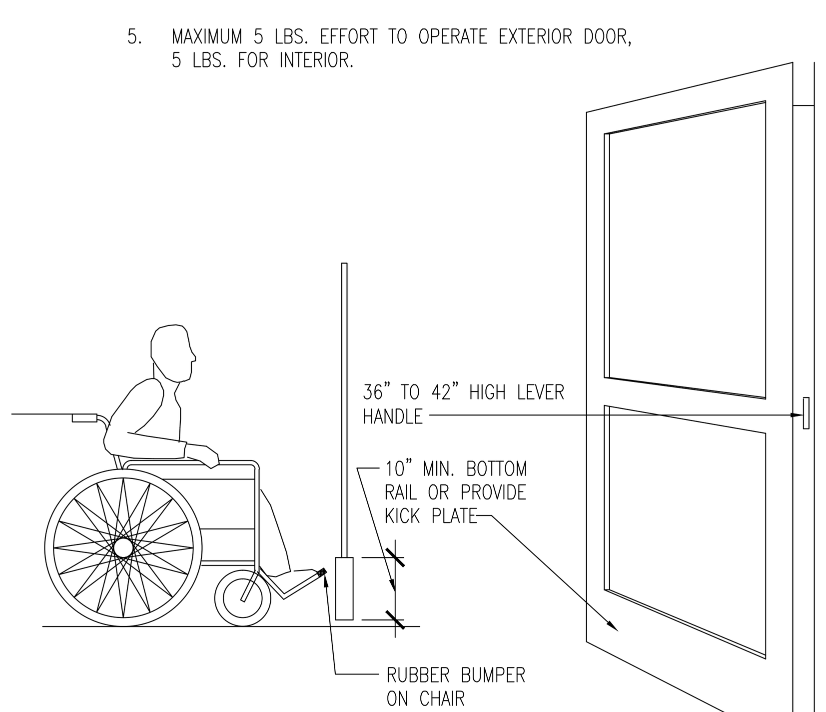

DOORS (2)

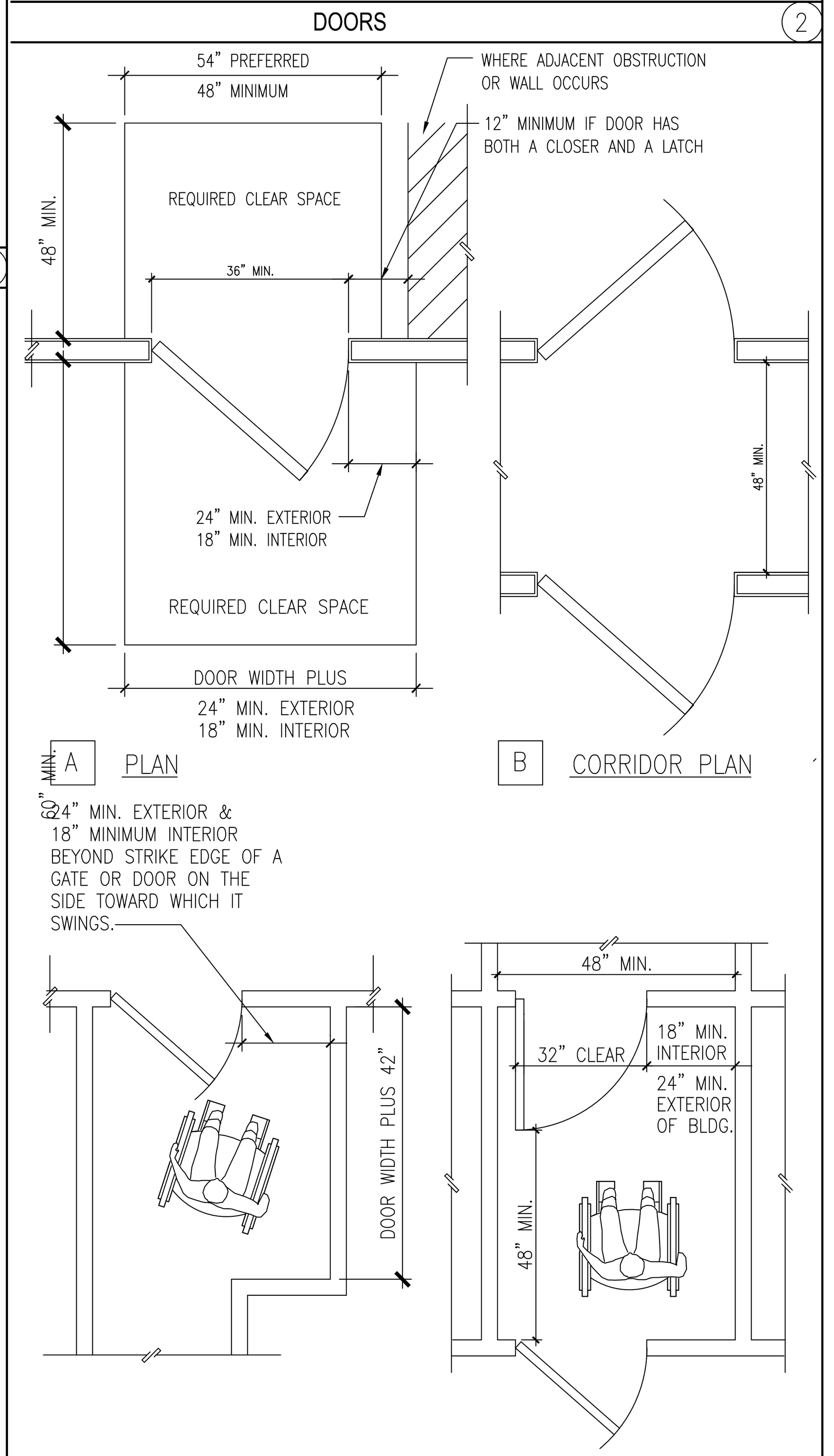

A PLAN

B CORRIDOR PLAN

B RAMP LANDING AT DOORWAY PLAN

C VESTIBULE PLAN

NOTES:

1. CLEAR SPACES MUST BE LEVEL TO PREVENT WHEELCHAIRS FROM ROLLING WHEN THE OCCUPANT RELEASES THE WHEEL GRIPS TO REACH FOR THE DOOR. 1/4" PER FOOT IS ALLOWED FOR DRAINAGE.
2. WHERE DOORS OPEN ONTO, BUT NOT INTO A CORRIDOR, THE REQUIRED LEVEL AREA BEYOND THE DOORS MAY BE A MINIMUM OF 48". FOR ADDITIONAL INFORMATION, SEE APPLICABLE NOTES ON TYPICAL ACCESSIBILITY NOTES SHEET.

DOOR CLEAR SPACE (1)

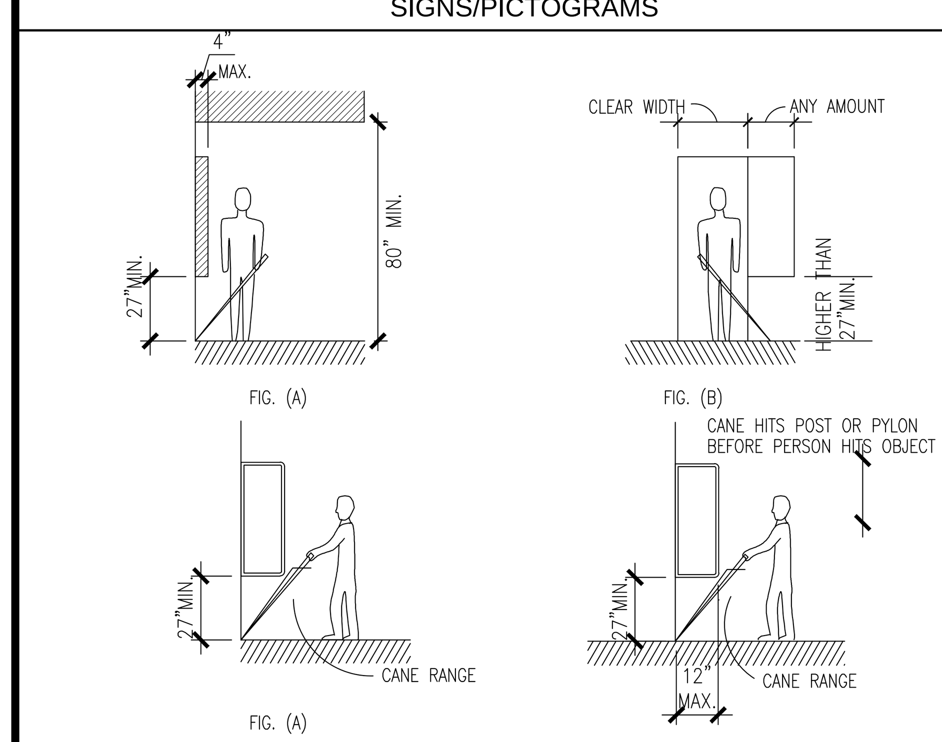

PROTRUDING OBJECTS (6)

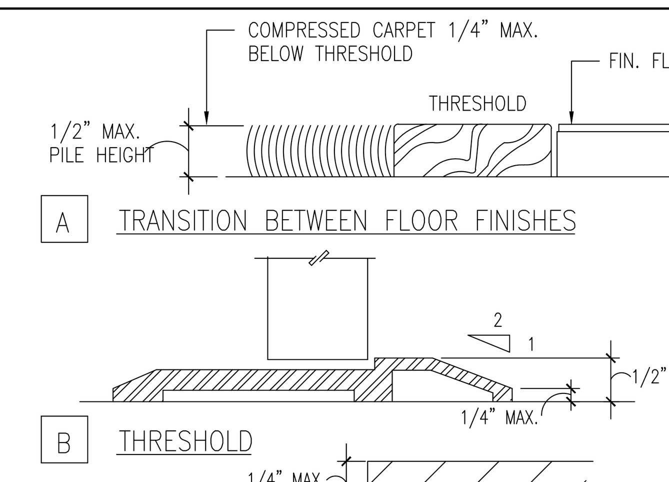

A TRANSITION BETWEEN FLOOR FINISHES

B THRESHOLD

C LEVEL CHANGES

NOTES:

1. 1/2" MAXIMUM TOTAL HEIGHT WITH 1/4" MAXIMUM VERTICAL CHANGE AT EDGE.
2. 1 : 2 SLOPED BEVEL REQUIRED IF LEVEL CHANGE IS OVER 1/4" VERITCAL LEVEL CHANGE.
3. 1/4" MAXIMUM VERTICAL LEVEL CHANGE.

THRESHOLD/LEVEL CHANGE

(5)

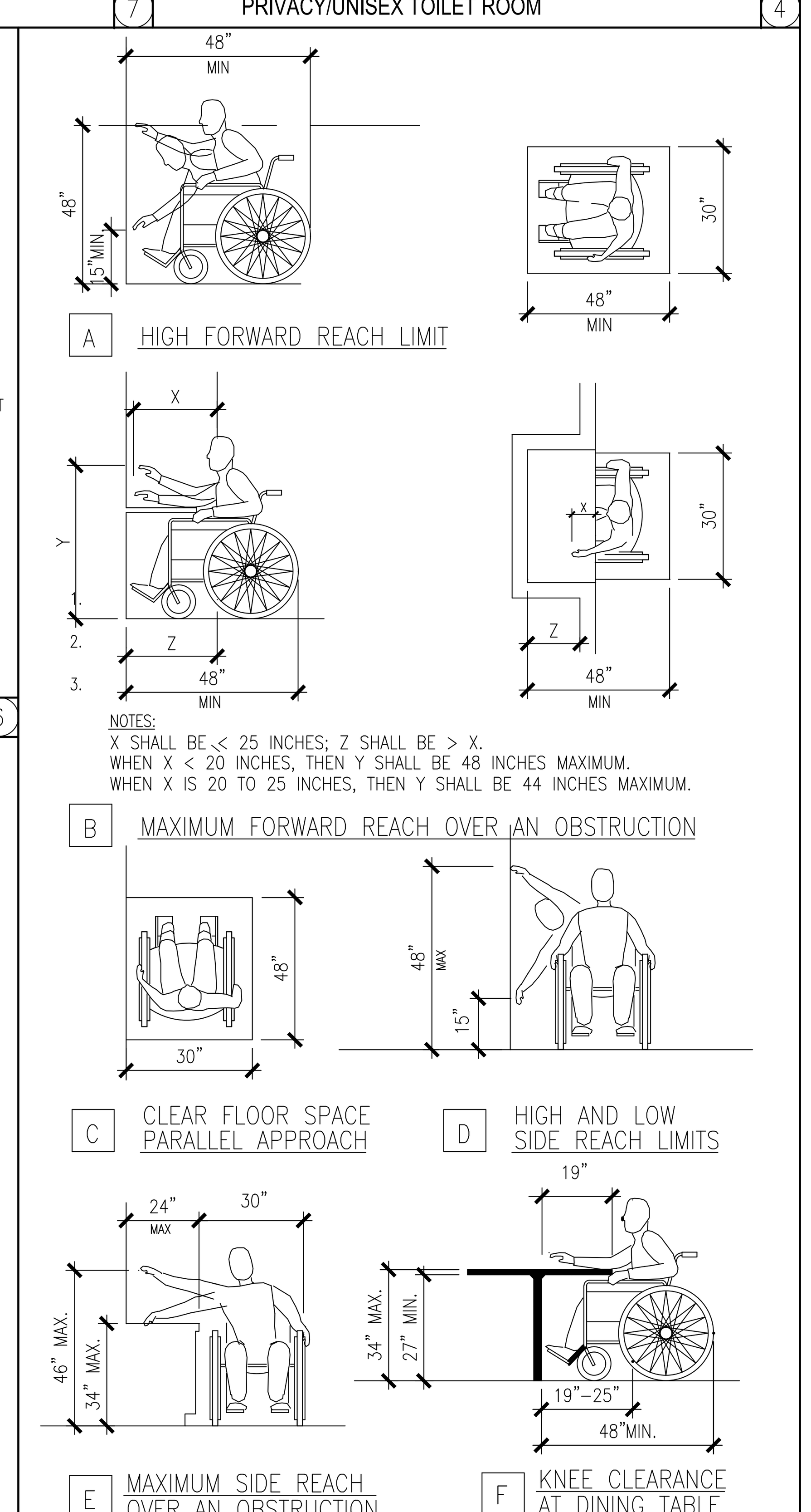

A HIGH FORWARD REACH LIMIT

NOTES:
X SHALL BE < 25 INCHES; Z SHALL BE > X.
WHEN X < 20 INCHES, THEN Y SHALL BE 48 INCHES MAXIMUM.
WHEN X IS 20 TO 25 INCHES, THEN Y SHALL BE 44 INCHES MAXIMUM.

B MAXIMUM FORWARD REACH OVER AN OBSTRUCTION

C CLEAR FLOOR SPACE PARALLEL APPROACH

D HIGH AND LOW SIDE REACH LIMITS

E MAXIMUM SIDE REACH OVER AN OBSTRUCTION

F KNEE CLEARANCE AT DINING TABLE

REACH REQUIREMENTS (3)

THE CALIFORNIA BUILDING CODE CHAPTER 11B FOR ACCESSIBLE PARKING STANDARDS FOR COMMERCIAL BUILDINGS & PUBLIC ACCOMMODATIONS. FOR ADDITIONAL PARKING REGULATIONS PLEASE REFER TO THE LOCAL MUNICIPAL CODE FOR THE REQUIREMENTS.

ACCESSIBLE PARKING

1. PARKING SPACES COMPLYING WITH SECTION 11B-502 THAT SERVE A PARTICULAR BUILDING OR FACILITY SHALL BE LOCATED ON THE SHORTEST ACCESSIBLE ROUTE FROM PARKING TO AN ENTRANCE COMPLYING WITH SECTION 11B-206.4. WHERE PARKING SERVES MORE THAN ONE ACCESSIBLE ENTRANCE, PARKING SPACES COMPLYING WITH SECTION 11B-502 SHALL DISPERSED AND LOCATED ON THE SHORTEST ACCESSIBLE ROUTE TO THE ACCESSIBLE ENTRANCES. IN PARKING FACILITIES THAT DO NOT SERVE A PARTICULAR BUILDING OR FACILITY, PARKING SPACES COMPLYING WITH SECTION 11B-502 SHALL BE LOCATED ON THE SHORTEST ACCESSIBLE ROUTE TO AN ACCESSIBLE PEDESTRIAN ENTRANCE OF THE PARKING FACILITY. (PER 11B-208.3.1)

SURFACES SLOPES OF ACCESSIBLE PARKING SPACES

1. 11B-405.2 SLOPE – RAMP RUNS SHALL HAVE A RUNNING SLOPE NOT STEEPER THAN 1:12.
2. 11B.405.3 CROSS SLOPE – CROSS SLOPE OF RAMP RUNS SHALL NOT BE STEEPER THAN 1:48
3. 11B-405.6 RISE – THE RISE OF ANY RAMP RUN SHALL BE 30" MAXIMUM.

PARKING SPACE AND SIGNAGE

1. CAR AND VAN PARKING SPACES SHALL COMPLY WITH SECTION 11B-502. WHERE PARKING SPACES ARE MARKED WITH LINES, WITH MEASUREMENTS OF PARKING SPACES AND ACCESS AISLES SHALL BE MADE FROM THE CENTERLINE OF THE MARKINGS (PER 11B-501.1).
2. CAR AND VAN PARKING SPACES SHALL BE 18' LONG MIN. CAR PARKING SPACES SHALL BE 9' WIDE MIN. AND VAN PARKING SPACES SHALL BE 12' WIDE MINIMUM, SHALL BE MARKED TO DEFINED THE WIDTH, AND SHALL HAVE AN ADJACENT ACCESS AISLE COMPLYING WITH SECTION 11B-502.3. (PER 11B-502.2).
3. ACCESS AISLES SERVING PARKING SPACES SHALL COMPLY WITH SECTION 11B-502.3. ACCESS AISLES SHALL ADJOIN AN ACCESSIBLE ROUTE. TWO PARKING SPACES SHALL BE PERMITTED TO SHARE A COMMON ACCESS AISLE. (PER 11B-502.3).
WIDTH – ACCESS AISLE SERVING CAR AND VAN PARKING SPACE SHALL BE 60" WIDE MINI.
LENGTH – ACCESS AISLE SHALL EXTEND THE FULL REQUIRED LENGTH OF THE PARKING SPACES THEY SERVE. (PER 11B-502.3.2)
MARKING – ACCESS AISLE SHALL BE MARKED WITH A BLUE PAINTED BORDERLINE AROUND THEIR PERIMETER. THE AREA WITHIN THE BLUE BORDERLINES SHALL BE MARKED WITH HATCHED LINES A MAX. OF 36" ON CENTER IN A COLOR CONTRASTING WITH THAT OF THE AISLE SURFACE, PREFERABLY BLUE OR WHITE. THE WORDS "NO PARKING" SHALL BE PAINTED ON THE SURFACE WITHIN ACCESS AISLE IN WHITE LETTERS A MIN. OF 12" IN HEIGHT & LOCATED TO BE VISIBLE FROM THE ADJACENT VEHICULAR WAY. ACCESS AISLE MARKINGS MAY EXTEND BEYOND THE MINIMUM REQUIRED LENGTH. (PER 11B-502.3.3).
4. PARKING SPACE IDENTIFICATION SIGNS SHALL INCLUDE THE INTERNATIONAL SYMBOL OF ACCESSIBILITY COMPLYING WITH SECTION 11B-703.7.2.1. SIGNS IDENTIFYING VAN PARKING SPACES SHALL CONTAIN ADDITIONAL LANGUAGE OR AN ADDITIONAL SIGN WITH THE DESIGNATION "VAN ACCESSIBLE." SIGNS SHALL BE 60" MIN. ABOVE FINISH FLOOR OR GROUND SURFACE MEASURED TO THE BOTTOM OF THE SIGN.
FINISH AND SIZE – PARKING IDENTIFICATION SIGNS SHALL BE REFLECTORIZED WITH A MIN. AREA OF 70 SQUARE INCHES. (PER 11B-502.6.1).
MINIMUM FINE – ADDITIONAL LANGUAGE OR AN ADDITIONAL SIGN BELOW THE INTERNATIONAL SYMBOL OF ACCESSIBILITY SHALL STATE "MINIMUM FINE $250." (PER 11B-520.6.2).
LOCATION – A PARING SPACE IDENTIFICATION SIGN SHALL BE VISIBLE FROM EACH PARKING SPACE. SIGNS SHALL BE PERMANENTLY POSTED EITHER IMMEDIATELY ADJACENT TO THE PARKING SPACE OR WITHIN THE PROTECTED PARKING SPACE WIDTH AT THE HEAD END OF THE PARKING SPACE. SIGNS MAY ALSO BE PERMANENTLY POSTED ON A WALL AT THE INTERIOR END OF THE PARKING SPACE. (PER 11B-502.6.3)
5. EACH ACCESSIBLE CAR AND VAN SPACE SHALL HAVE SURFACE IDENTIFICATION COMPLYING WITH EITHER SECTIONS 11B-502.6.4.1 OR 11B-502.6.4.2. (PER 11B-502.6.4.1)

THE PARKING SPACE SHALL BE MARKED WITH AN INTERNATIONAL SYMBOL OF ACCESSIBILITY (ISA) COMPLYING WITH SECTION 11B-703.7.2.1IN WHITE ON A BLUE BACK GROUND A MINIMUM 36" WIDE BY 36" HIGH. THE CENTER LINE OF ISA SHALL BE A MAXIMUM OF 6" FROM THE CENTER LINE OF THE PARKING SPACE, ITS SIDES PARALLEL TO THE LENGTH OF THE PARKING SPACE AND ITS LOWER CORNER AT, OR LOWER SIDE ALIGNED WITH, THE END OF THE PARKING SPACE LENGTH. (11B-502.6.4.1)

THE PARKING SPACE SHALL BE OUTLINED OR PAINTED BLUE AND SHALL BE MARKED WITH AN ISA COMPLYING WITH SECTION 11B-703.7.2.1 A MIN. 36" WIDE BY 36" HIGH IN WHITE OR A SUITABLE CONTRASTING COLOR. THE CENTERLINE OF THE ISA SHALL BE A MAX. OF 6" FROM THE CENTERLINE OF THE PARKING SPACE, ITS SIDES PARALLEL TO THE LENGTH OF THE PARKING SPACE AND ITS LOWER CORNER AT, OR LOWER SIDE ALIGNED WITH, THE END OF THE PARKING SPACE. (PER 11B-502.6.4.2)

6. AN ADDITIONAL SIGN SHALL BE POSTED EITHER;
1) IN A CONSPICUOUS PLACE AT EACH ENTRANCE TO AN OFF-STREET PARKING FACILITY OR
2) IMMEDIATELY ADJACENT TO ON-SITE ACCESSIBLE PARKING AND VISIBLE FROM EACH PARKING SPACE. (PER 11B-502.8)
THE SIZE OF ADDITIONAL SIGN SHALL NOT BE LESS THAN 17" WIDE BY 22" HIGH. (PER 11B-502.8.1)
THE LETTER OF ADDITIONAL SIGN SHALL CLEARLY STATE IN LETTERS WITH A MINIMUM HEIGHT OF 1" THE FOLLOWING:

"UNAUTHORIZED VEHICLES PARKED IN DESIGNATED ACCESSIBLE SPACE NOT DISPLAYING DISTINGUISHING PLACARDS OR SPECIAL LICENSE PLATES ISSUED FOR PERSONS WITH DISABILITIES WILL BE TOWED AWAY AT THE OWNER'S EXPENSE. TOWED VEHICLES MAY BE RECLAIMED AT: _____ OR BY TELEPHONING _______."
BLANK SPACES SHALL BE FILLED IN WHICH APPROPRIATE INFORMATION AS A PERMANENT PART OF THE SIGN. (PER 11B-502.8.2)

VERTICAL CLEARANCE

1. PARKING SPACES, ACCESS AISLES AND VEHICULAR ROUTES SERVING THEM SHALL PROVIDE A VERTICAL CLEARANCE 98" MINIMUM. (PER 11B-502.6)

VAN PARKING SPACES

1. FOR EVERY SIX OR FRACTION OF SIX PARKING SPACES REQUIRED BY SECTION 11B-208.2 TO COMPLY WITH SECTION 11B-502, AT LEAST ONE SHALL BE A VAN PARKING SPACE COMPLYING WITH SECTION 11B-502. (PER 11B-208.2.4).

EACH ACCESSIBLE CAR AND VAN SPACE SHALL HAVE SURFACE IDENTIFICATION COMPLYING WITH EITHER SECTION 11B-502.6.4 OR 11B-502.6.4.2.

1. THE PARKING SPACE SHALL BE MARKED WITH AN INTERNATIONAL SYMBOL OF ACCESSIBILITY COMPLYING WITH SECTION 11B-703-.7.2.1 IN WHITE ON A BLUE BACKGROUND A MINIMUM 36" WIDE BY 36" HIGH. THE CENTERLINE OF THE INTERNATIONAL SYMBOL OF ACCESSIBILITY SHALL BE A MAXIMUM OF 6" FROM THE CENTERLINE OF THE PARKING SPACE, ITS SIDES PARALLEL TO THE LENGTH OF THE PARKING SPACE AND ITS LOWER CORNER AT, OR LOWER SIDE ALIGNED WITH, THE END OF THE PARKING SPACE LENGTH. (PER 11B-502.6.4)
2. THE PARKING SPACE SHALL BE OUTLINED OR PAINTED BLUE AND SHALL BE MARKED WITH AN INTERNATIONAL SYMBOL OF ACCESSIBILITY (ISA) COMPLYING WITH SECTION 11B-7037.2.1 A MINIMUM 36" WIDE BY 36" HIGH IN WHITE OR A SUITABLE CONTRASTING COLOR. THE CENTER LINE OF ISA SHALL BE A MINIMUM OF 6" FROM THE CENTER OF PARKING SPACE, ITS SIDES PARALLEL TO THE LENGTH OF THE PARKING SPACE & LOWER CORNER AT, OR LOWER SIDE ALIGNED WITH, THE END OF THE PARKING SPACE. (PER 11B-502..6.4.2)

AN ADDITIONAL SIGN SHALL BE POSTED EITHER: (PER 11B-502.8)

1. IN A CONSPICUOUS PLACE AT EACH ENTRANCE TO AN OFF-STREET PARKING FACILITY OR
2. IMMEDIATELY ADJACENT TO ON-SITE ACCESSIBLE PARKING AND VISIBLE FROM EACH PARKING SPACE. THE ADDITIONAL SIGN SHALL NOT BE LESS THAN 17" WIDE BY 22" HIGH (PER 11B-502.8.1)

THE ADDITIONAL SIGN SHALL BE CLEARLY STATE IN LETTERS WITHIN A MINIMUM HEIGHT OF 1" THE FOLLOWING: (PER 11B-502.8.2)

"UNAUTHORIZED VEHICLES PARKED IN DESIGNATED ACCESSIBLE SPACES NOT DISPLAYING DISTINGUISHING PLACARDS OR SPECIAL LICENSE PLATES ISSUED FOR PERSONS WITH DISABILITIES WILL BE TOWED AWAY AT THE OWNER'S EXPENSE. TOWED VEHICLES MAY BE CLAIMED AT: ___________ OR BY TELEPHONING ____________."

BLANK SPACES SHALL BE FILLED IN WITH APPROPRIATE INFORMATION AS A PERMANENT PART OF THE SIGN.

WALKS & SIDEWALKS

GENERAL. WALKING SURFACES THAT ARE A PART OF AN ACCESSIBLE ROUTE SHALL COMPLY WITH SECTION 11B-403 11B-403.5.1 CLEAR WIDTH. EXCEPT AS PROVIDED IN SECTIONS 11B-403.5.2. AND 11B-403.5.3, THE CLEAR WIDTH OF WALKING SURFACES SHALL BE 36 INCHES (914mm).
THE CLEAR WIDTH OF SIDEWALKS AND WALKS SHALL BE 48" INCHES (219mm) MINIMUM. WHEN, BECAUSE OF "RIGHT-AWAY RESTRICTIONS", NATURAL BARRIERS OR OTHER EXISTING CONDITIONS, THE ENFORCING AGENCY DETERMINES THAT COMPLIANCE WITH THE 48-INCH (219mm) CLEAR SIDEWALK WIDTH WOULD CREATE AN UNREASONABLE HARDSHIP, THE CLEAR WIDTH MAY BE REDUCED TO 36 INCHES (914mm)

11B-303.2 VERTICAL
CHANGES IN THE LEVEL OF 1/4 INCH (6.4mm) HIGH MAXIMUM SHALL BE PERMITTED TO BE VERTICAL AND WITHOUT EDGE TREATMENT

11B-303.3 BEVELED.
CHANGES IN LEVEL BETWEEN 1/4 INCH (6.4mm) HIGH MINIMUM AND 1/2 INCH (12.7mm) HIGH MAXIMUM SHALL BE BEVELED WITH A SLOPE NOT STEEPER THAN 1:2

11B-303.3 BEVELED.
CHANGES IN LEVEL BETWEEN 1/4 INCH (6.4mm) HIGH MINIMUM AND 1/2 INCH (12.7mm) HIGH MAXIMUM SHALL BE BEVELED WITH A SLOPE NOT STEEPER THAN 1:2

11B-403.3 SLOPE.
THE RUNNING SLOPE OF WALKING SURFACES SHALL NOT BE STEEPER THAN 1:20. THE CROSS SLOPE OF WALKING SURFACES SHALL NOT BE STEEPER THAN 1:48

PROTRUDING OBJECTS

11B-307.2 PROTRUSION LIMITS. OBJECTS WITH LEADING EDGES MORE THAN 27 INCHES (686 mm) AND NOT MORE THAN 80 INCHES (2032 mm) ABOVE THE FINISH FLOOR OR GROUND SHALL PROTRUDE 4 INCHES (102 mm) MAXIMUM HORIZONTALLY INTO THE CIRCULATION PATH.

FLOOR OR GROUND SURFACES

(11B-302.1) GENERAL. FLOOR AND GROUND SURFACES SHALL BE STABLE, FIRM, AND SLIP RESISTANT AND SHALL COMPLY WITH SECTION 11B-302

(11B-302.2) CARPET OR CARPET TILE SHALL BE SECURELY ATTACHED AND SHALL HAVE A FIRM CUSHION, PAD, OR BACKING OR NO CUSHION OR PAD. CARPET OR CARPET TILE SHALL HAVE A LEVEL LOOP, TEXTURED LOOP, LEVELCUT PILE, LEVEL CUT/UNCUT PILE TEXTURE. PILE HEIGHT SHALL BE 1/2 INCH (12.7MM) MAXIMUM. EXPOSED EDGES OR CARPET SHALL BE FASTENED TO FLOOR SURFACE AND SHALL HAVE TRIM ON THE ENTIRE LENGTH OF THE EXPOSED EDGE. CARPET EDGE TRIM SHALL COMPLY WITH SECTION 11B-303.

(11B-302.3) OPENINGS. OPENINGS IN FLOOR OR GROUND SURFACES SHALL NOT, ALLOW PASSAGE OF A SYPHERE MORE THAN 1/2 INCH (12.7 MM) DIAMETER EXCEPT AS ALLOWED IN SECTION 11B-407.4.3

(11B-303.2) VERTICAL. CHANGES IN LEVEL GREATER THAN 1/4 INCH (6.4 MM) AND NOT EXCEEDING 1/2 IN HEIGHT SHALL BE BEVELED WITH A SLOPE NOT STEEPER THEN 1:2 (11B-303) & (11B-303.3)

SANITARY FACILITIES (GENERAL)

11B-703.7.2.6.3 UNISEX TOILET AND BATHING FACILITIES. UNISEX TOILET AND BATHING FACILITIES SHALL BE IDENTIFIED BY A CIRCLE, 1/4 INCH (6.4mm) THICK AND 12 INCHES (305mm) IN DIAMETER WITH A 1/4 INCH (6.4mm) THICK TRIANGLE WITH A VERTEX POINTING UPWARD SUPERIMPOSED ON THE CIRCLE AND WITHIN THE 12-INCH (305mm) DIAMETER. THE TRIANGLE SYMBOL SHALL CONTRAST WITH THE CIRCLE SYMBOL, EITHER LIGHT ON A DARK BACKGROUND OR DARK ON A LIGHT BACKGROUND. THE CIRCLE SYMBOL SHALL CONTRAST WITH THE DOOR, EITHER LIGHT ON A DARK BACKGROUND OR DARK ON A LIGHT BACKGROUND.

IDENTIFICATION SYMBOLS

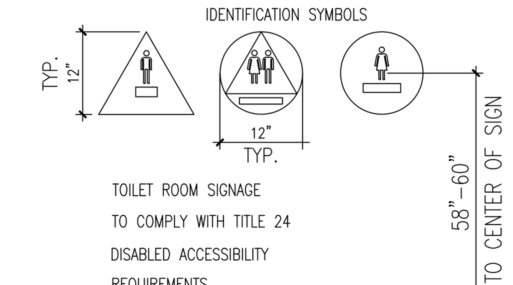

TOILET ROOM SIGNAGE TO COMPLY WITH TITLE 24 DISABLED ACCESSIBILITY REQUIREMENTS

SANITARY FACILITY FIXTURES & ACCESSORIES

11B-606.5 EXPOSED PIPES AND SURFACES.
WATER SUPPLY AND DRAIN PIPES UNDER LAVATORIES AND SINKS SHALL BE INSULATED OR OTHERWISE CONFIGURED TO PROTECT AGAINST CONTACT. THERE SHALL BE NO SHARP OR ABRASIVE SURFACES UNDER LAVATORIES AND SINKS.

11B-703.7.2.6 TOILET AND BATHING FACILITIES GEOMETRIC SYMBOLS. DOORWAYS LEADING TO TOILET ROOMS AND BATHING ROOMS SHALL BE IDENTIFIED BY A GEOMETRIC SYMBOL COMPLYING WITH SECTION 11B-703.7.2.6. THE SYMBOL SHALL BE MOUNTED AT 58 INCHES (1473mm) MINIMUM AND 60 INCHES (1524mm) MAXIMUM ABOVE THE FINISH FLOOR OR GROUND SURFACE MEASURED FROM THE CENTERLINE OF THE SYMBOL. WHERE A DOOR IS PROVIDED THE SYMBOL SHALL BE MOUNTED WITHIN 1 INCH (25mm) OF THE VERTICAL CENTERLINE OF THE DOOR.

11B-703.4.1. HEIGHT ABOVE FINISH FLOOR OR GROUND.
TACTILE CHARACTERS ON SIGNS SHALL BE LOCATED 48 INCHES (1219mm) MINIMUM ABOVE THE FINISH FLOOR OR GROUND SURFACE, MEASURED FROM THE BASELINE OF THE LOWEST BRAILLE CELLS AND 60 INCHES (1524mm) MAXIMUM ABOVE THE FINISH FLOOR OR GROUND SURFACE, MEASURED FROM THE BASELINE OF THE HIGHEST LINE OF RAISED CHARACTERS.

DOOR, DOORWAYS, AND GATES

1. DOORS, DOORWAYS, AND GATES THAT ARE PART OF AN ACCESSIBLE ROUTE SHALL COMPLY WITH SECTION (11B-404.1)
2. MANUAL DOORS, DOORWAYS, AND MANUAL GATES INTENDED FOR USER PASSAGE SHALL COMPLY WITH SECTION 11B-504.2 (PER 11B-404.2)
3. DOOR OPENINGS SHALL PROVIDE A CLEAR WIDTH OF 32" MIN. CLEAR OPENINGS OF DOORWAYS WITH SWINGING DOORS SHALL BE MEASURED BETWEEN THE FACE OF THE DOOR AND THE STOP, WITH THE DOOR OPEN 90 DEGREES. OPENINGS MORE THAN 24" DEEP SHALL PROVIDE A CLEAR OPENING OF 36" MIN. THERE SHALL BE NO PROJECTION INTO THE REQUIRED CLEAR OPENING WIDTH LOWER THAN 34" ABOVE THE FINISH FLOOR OR GROUND. PROJECTIONS INTO THE CLEAR OPENING WIDTH BETWEEN 34" AND 80" ABOVE THE FINISH FLOOR OR GROUND SHALL NOT EXCEED 4". (PER 11B-404.2.3)
4. SWINGING DOORS AND GATES SHALL HAVE MANEUVERING CLEARANCES COMPLYING WITH TABLE 11B-404.2.4.1.
5. RECESSED DOORS & GATES SHALL HAVE MANEUVERING CLEARANCES FORWARD APPROACH AND SHALL BE PROVIDED WHEN ANY OBSTRUCTION WITHIN 18" OF THE LATCH SIDE AT AN INTERIOR DOORWAY, OR WITHIN 24" OF THE LATCH SIDE OF AN EXTERIOR DOORWAY, PROJECTS MORE THAN 8" BEYOND THE FACE OF THE DOOR, MEASURED PERPENDICULAR TO THE FACE OF THE DOOR OR GATE. (PER 11B-404.2.4.3)
6. FLOOR OR GROUND SURFACE WITHIN REQUIRED MANEUVERING CLEARANCES SHALL COMPLY WITH SECTION 11B-302. CHANGES IN LEVEL ARE NOT PERMITTED. (PER 11B-404.2.4.4)
7. PROVIDED THRESHOLD AT DOORWAYS SHALL BE 1/2" HIGH MAX. RAISED THRESHOLDS AND CHANGES IN LEVEL AT DOORWAYS SHALL COMPLY WITH SECTIONS11B-302 & 11B-303.(PER11B-404.2.5)
8. HANDLES, PULLS, LATCHES, LOCKS, AND OTHER OPERABLE PARTS ON DOORS AND GATES SHALL COMPLY WITH SECTION 11B-309.4. OPERABLE PARTS OF SUCH HARDWARE SHALL BE 34" MINI. AND 44" MAX. ABOVE THE FINISH FLOOR OR GROUND. WHERE SLIDING DOORS ARE IN THE FULLY OPEN POSITION, OPERATING HARDWARE SHALL BE EXPOSED AND USABLE FROM BOTH SIDES. (PER 11B-404.2.7)
9. DOOR & GATE CLOSING SPEED SHALL COMPLY WITH SECTION 11B-404.2.8.
THE DOOR & GATE CLOSERS SHALL BE ADJUSTED SO THAT FROM AN OPEN POSITION OF 90 DEGREES, THE TIME REQUIRED TO MOVE THE DOOR TO A POSITION OF 12 DEGREES FROM THE LARCH IS 5 SECONDS MINIMUM. (PER 11B-404.2.8.1)
DOOR & GATE SPRING HINGES SHALL BE ADJUSTED SO THAT FROM THE OPEN POSITION OF 70 DEGREES, THE DOOR OR GATE SHALL MOVE TO THE CLOSED POSITION IN 1.5 SECONDS MIN. (PER 11B-404.2.8.2)
10. THE FORCE FOR PUSHING OR PULLING OPEN A DOOR OR GATE OR OTHER THAN FIRE DOORS SHALL BE AS FOLLOWS:
A. INTERIOR HINGED DOORS AND GATES: 5 POUNDS MAX.
B. SLIDING OR FOLDING DOORS: 5 POUNDS MAX.
C. REQUIRED FIRE DOORS: THE MINIMUM OPENING FORCE ALLOWABLE BY THE APPROPRIATE ADMINISTRATIVE AUTHORITY, NOT TO EXCEED 15 POUNDS.
THE FORCES DO NOT APPLY TO THE FORCE REQUIRED TO RETRACT LATCH BOLTS OR DISENGAGE OTHER DEVICES THAT HOLD THE DOOR OR GATE IN A CLOSED POSITION. (PER 11B-404.2.9)
11. SWINGING DOOR AND GATE SURFACES WITHIN 10" OF THE FINISH FLOOR OR GROUND MEASURED VERTICALLY SHALL HAVE A SMOOTH SURFACE ON THE PUSH SIDE EXTENDING THE FULL WIDTH OF THE DOOR OR GATE. PARTS CREATING HORIZONTAL OR VERTICAL JOINTS IN THESE SURFACES SHALL BE WITHIN 1/16" OF THE SAME PLANE AS THE OTHER AND BE FREE OF SHARP OR ABRASIVE EDGES. CAVITIES CREATED BY ADDED KICK PLATES SHALL BE CAPPED. (PER 11B-404.2.10)
12. AUTOMATIC DOORS & AUTOMATIC GATES SHALL COMPLY WITH SECTION 11B-404.3. FULL-POWERED AUTOMATIC DOORS SHALL COMPLY WITH ANSI/BHMA A156.10. LOW-ENERGY AND POWER-ASSISTED DOORS SHALL COMPLY WITH ANSI/BHMA A156.19. (PER 11B-404.3)
13. WHERE DOORS & GATES WITHOUT STANDBY POWER ARE A PART OF A MEANS OF EGRESS, THE CLEAR BREAK OUT OPENING AT SWINGING OR SLIDING DOORS AND GATES SHALL BE 32" MIN. WHEN OPERATED IN EMERGENCY MODE. (PER 11B-404.3.6)

HANDRAILS & GRAB BARS

1. HANDRAIL GRIPPING SURFACES WITH A CIRCULAR CROSS SECTION SHALL HAVE AN OUTSIDE DIAMETER OF 1 1/4" MIN. AND 2" MAX. (PER 11B-505.7.1)
HANDRAIL GRIPPING SURFACES AND ANY SURFACES ADJACENT TO THEM SHALL BE FREE OF SHARP OR ABRASIVE ELEMENTS AND SHALL HAVE ROUNDED EDGES (PER 11B-505.8)
2. GRAB BARS WITH CIRCULAR CROSS SECTIONS SHALL HAVE AN OUTSIDE DIAMETER OF 1 ¼" MIN. AND 2" MAX. (PER 11B-606.2.1)
GRAB BARS AND ANY WALL OR OTHER SURFACES ADJACENT TO GRAB BARS SHALL BE FREE OF SHARP OR ABRASIVE ELEMENTS AND SHALL HAVE ROUNDED EDGES. (PER 11B-609.5)

COMMUNICATION ELEMENTS

1. FIRE ALARM SYSTEMS SHALL HAVE PERMANENTLY INSTALLED AUDIBLE AND VISIBLE ALARMS COMPLYING WITH NFPA 72 & CHAPTER 9, SECTION 907.5.2.1 AND 907.5.2.3 (PER 11B-702.10)
2. ALL BUILDING ENTRANCES SHALL BE IDENTIFIED WITH SIGNS THAT COMPLY WITH WITH SECTION 11B-703. WHERE BOTH VISUAL AND TACTILE CHARACTERS, OR TWO SEPARATE SIGNS, ONE WITH VISUAL, AND ONE WITH TACTILE CHARACTERS. SHALL BE PROVIDED. (PER 11B-703.1)
3. SIGNS WITH TACTILE CHARACTERS SHALL COMPLY WITH SECTION 11B-703.4 & 11B-703.4.1
4. RAISED CHARACTERS SHALL BE 1/32" MIN. ABOVE THEIR BACKGROUND. 11B-703.2.1

5. CHARACTERS SHALL BE UPPERCASE. 11B-703.2.2
6. CHARACTERS SHALL BE SAN SERIF. CHARACTERS SHALL NOT BE ITALIC, OBLIQUE, SCRIPT, HIGHLY DECORATIVE, OR OF OTHER UNUSUAL FORMS. 11B-703.2.3
7. CHARACTERS SHALL BE SELECTED FROM FONTS WHERE THE WIDTH OF THE UPPERCASE LETTER "O" IN 55 60 PERCENT MIN. AND 110 PERCENT MAX. OF THE HEIGHT OF THE UPPERCASE LETTER "I". 11B-703.2.4
8. CHARACTERS HIGH MEASURED VERTICALLY FROM THE BASELINE OF THE CHARACTER SHALL BE 5/8" MIN. AND 2" MAX. BASED ON THE HEIGHT OF THE UPPERCASE LETTER "I". 11B-703.2.5
9. STROKE THICKNESS OF THE UPPERCASE LETTER "I" SHALL BE 15 PERCENT MAX. OF THE HEIGHT OF THE CHARACTER. 11B-703.2.6
10. CHARACTERS SPACING SHALL BE MEASURED BETWEEN THE TWO CLOSEST POINTS OF ADJACENT RAISED CHARACTERS WITHIN A MESSAGE, EXCLUDING WORD SPACES. WHERE CHARACTERS HAVE RECTANGULAR CROSS SECTIONS, SPACING BETWEEN INDIVIDUAL RAISED CHARACTERS SHALL BE 1/8" MIN. AND 4 TIMES THE RAISED CHARACTER STROKE WIDTH MAXIMUM. WHERE CHARACTERS HAVE OTHER CROSS SECTIONS, SPACING BETWEEN INDIVIDUAL RAISED CHARACTER SHALL BE 1/16" MIN. AND 4 TIMES THE RAISED CHARACTER STROKE WIDTH MAX. AT THE TOP OF THE CROSS SECTIONS. CHARACTERS SHALL BE SEPARATED FROM RAISED BORDERS AND DECORATIVE ELEMENTS 3/8" MIN. 11B-703.2.7
11. SPACING BETWEEN THE BASELINES OF SEPARATE LINES OF RAISED CHARACTERS WITHIN A MESSAGE SHALL BE 135% MIN. AND 170% MAX. OF THE RAISED CHARACTER HEIGHT. 11B-703.2.8
12. TEXT SHALL BE IN A HORIZONTAL FORMAT. 11B-703.2.9
13. BRAILLE SHALL BE CONTRACTED (GRADE 2) AND SHALL COMPLY WITH SECTION 11B-703.3 BRAILLE AND 11B-703.4 INSTALLATION HEIGHT AND LOCATION 11B-703.3
14. BRAILLE DOTS SHALL HAVE A DOMED OR ROUNDED SHAPE AND SHALL COMPLY WITH TABLE 11B-703.3.1. THE INDICATION OF AN UPPERCASE LETTER OR LETTERS SHALL ONLY BE USED BEFORE THE FIRST WORD OF SENTENCES, PROPER NOUNS AND NAMES, INDIVIDUAL LETTERS OF THE ALPHABET INITIALS, AND ACRONYMS. 11B-703.3.1
15. BRAILLE SHALL BE POSITIONED BELOW THE CORRESPONDING TEXT IN A HORIZONTAL FORMAT, FLUSH LEFT OR CENTERED. IF TEXT IS MULTI-LINED, BRAILLE SHALL BE PLACED BELOW THE ENTIRE TEXT. BRAILLE SHALL BE SEPARATED 3/8" MIN. AND 1/2" MAX. FROM ANY OTHER TACTILE CHARACTERS AND 3/8" MIN. FROM RAISED BORDERS AND DECORATIVE ELEMENTS. 11B-703.3.2 (SEE EXCEPTION).
16. SIGNS WITH TACTILE CHARACTERS SHALL COMPLY WITH 11B-703.4 INSTALLATION HEIGHT AND LOCATION. 11B-703.4
17. TACTILE CHARACTERS ON SIGNS SHALL BE LOCATED 48" MIN. ABOVE THE FINISH FLOOR OR GROUND SURFACE, MEASURED FROM THE BASELINE OF THE LOWEST TACTILE CHARACTER BRAILLE CELLS AND 60" MAX. ABOVE THE FINISH FLOOR OR GROUND SURFACE, MEASURED FROM THE BASELINE OF THE HIGHEST TACTILE CHARACTER LINE RAISED CHARACTERS. 11B-703.4.1 (SEE EXCEPTION)
18. WHERE A TACTILE SIGN IS PROVIDED AT DOOR, THE SIGN SHALL BE LOCATED ALONGSIDE THE DOOR AT THE LATCH SIDE. WHERE A TACTILE SIGN IS PROVIDED AT DOUBLE DOORS WITH ONE ACTIVE LEAF, THE SIGN SHALL BE LOCATED ON THE INACTIVE LEAF. WHERE A TACTILE SIGN IS PROVIDED AT DOUBLE DOORS WITH TWO ACTIVE LEAFS, THE SIGN SHALL BE LOCATED TO THE RIGHT OF THE RIGHT HAND DOOR. WHERE THERE IS NO WALL SPACE AT THE LATCH SIDE OF A SINGLE DOOR OR AT THE RIGHT SIDE OF DOUBLE DOORS, SIGNS SHALL BE LOCATED ON THE NEAREST ADJACENT WALL. SIGNS CONTAINING TACTILE CHARACTERS SHALL BE LOCATED SO THAT A CLEAR FLOOR SPACE OF 18" MIN. BY 18" MIN, CENTERED ON THE TACTILE CHARACTERS, IS PROVIDED BEYOND THE ARC OF ANY DOOR SWING BETWEEN THE CLOSED POSITION AND 45 DEGREE OPEN POSITION. WHERE PERMANENT IDENTIFICATION SIGNAGE IS PROVIDED FOR ROOMS AND SPACES THEY SHALL BE LOCATED ON THE APPROACH SIDE OF THE DOOR AS ONE ENTERS THE ROOM OR SPACE. SIGNS THAT IDENTIFY EXITS SHALL BE LOCATED ON THE APPROACH SIDE OF THE DOOR AS ONE ENTERS THE ROOM OR SPACE. SIGNS THAT IDENTIFY EXITS SHALL BE LOCATED ON THE APPROACH SIDE OF THE DOOR AS ONE EXITS THE ROOM OR SPACE. 11B-703.4.2 (SEE EXCEPTION)
19. VISUAL CHARACTERS SHALL COMPLY WITH THE FOLLOWING, EXCEPT WHERE VISUAL CHARACTERS COMPLY WITH 11B-703.2 RAISED CHARACTERS AND ARE ACCOMPANIED BY BRAILLE COMPLYING WITH 11B-703.3 BRAILLE, THEY SHALL NOT BE REQUIRED TO COMPLY WITH 11B-703.5.2 THROUGH 11B-703.5.6, 11B-703.5.8 AND 11B-703.5.9

ELECTRICAL

(11B-308.1.2) ELECTRICAL RECEPTACLE OUTLETS. ELECTRICAL RECEPTACLE OUTLETS ON BRANCH CIRCUITS OF 30 AMPERES OR LESS AND COMMUNICATION SYSTEM RECEPTACLES SHALL SHALL BE MEASURED TO THE BOTTOM OF THE OUTLET BOX AND THE HIGH REACH SHALL BE MEASURED TO THE TOP OF THE OUTLET BOX.

DESIGN ENGINEER'S SEAL & SIGNATURE:

LICENSED ARCHITECT
GARY T. HIPOLITE
No. C13681
January 31, 2017
STATE OF CALIFORNIA

PREPARED UNDER THE SUPERVISION OF:

designun
PLANNING AND DESIGN
12832 Valley View Street | Suite C | Garden Grove | CA | 92845
Phone 714.892-3900 | Fax 714.892-3944

Underground Service Alert
Call: TOLL FREE
1(800) 422-4133
TWO WORKING DAYS BEFORE YOU DIG

REVISIONS

NO.	DESCRIPTION	DATE
PC1	PLAN CHECK CORRECTION	03/30/15
	BID SET	04/10/15

REFERENCES

APPROVED BY:

CITY ENGINEER RCE: DATE:

DATE:	03/09/15
SCALE (H):	
SCALE (V):	
DRAWN BY:	D.L.
CHECKED BY:	G.H.

SHEET TITLE:
ACCESSIBILITY

PROJECT NAME AND ADDRESS:
5414 LA PALMA AVE., LA PALMA, CA

CITY PROJECT NO.

SHEET NO.
CV1.1
DETAILS & NOTES

SHEET OF

2013 *CAL*Green
NONRESIDENTIAL MANDATORY MEASURES CHECKLIST
(Effective January 1, 2014)

SECTION	CREDIT	REQUIREMENTS	Measures provided on plan sheet:
PLANNING AND DESIGN (Site Development)			
5.106.1	Storm Water Pollution Prevention Plan	Newly constructed projects which disturb less than one acre of land shall prevent the pollution of stormwater runoff from the construction activities through local ordinance in Section 5.106.1 or Best management practices (BMP) in Section 5.106.1.2.	N/A
5.106.4	Bicycle Parking	Comply with Sections 5.106.4.1.1 and 5.106.4.1.2, or meet local ordinance, whichever is stricter **5.106.4.1.1 Short-Term bicycle parking.** If the new project or addition or alteration is anticipated to generate visitor traffic, provide permanently anchored bicycle parking within 200 ft.of the visitors' entrance, readily visible to passers-by, for 5 percent of new visitor motorized vehicle parking spaces being added, with a minimum of one two-bike capacity rack. **Exception:** Additions or alterations which add 9 or less visitor parking spaces. **5.106.4.1.2 Long-Term bicycle parking.** For new buildings with over 10 tenant-occupants or for additions or alterations that add 10 or more tenant parking spaces, provide secure bicycle parking for 5 percent of tenant-occupied motorized vehicle parking spaces being added, with a minimum of one space.	N/A
5.106.5.2	Designated Parking	In new projects or additions or alterations that add 10 or more vehicular parking spaces, provide designated parking for any combination of low-emitting, fuel efficient, and carpool/van pool vehicles per Table 5.106.5.2.	N/A
5.106.8	Light Pollution Reduction	New outdoor lighting systems shall be designed and installed to comply with: 1. The minimum requirements in the *California Energy Code* for Lighting Zones 1–4 as defined in Chapter 10 of the *California Administrative Code*; and 2. Backlight, Uplight and Glare (BUG) ratings defined in IESNA TM-15-11; and 3. Allowable BUG ratings not exceeding those shown in Table 5.106.8, or Comply with a local ordinance lawfully enacted pursuant to Section 101.7, whichever is more stringent. **Exceptions:** 1. Luminaires that qualify as exceptions in Section 147 of *Calif. Energy Code* 2. Emergency lighting	N/A
5.106.10	Grading and Paving	Construction plans shall indicate how site grading or a drainage system will manage all surface water flows to keep water from entering buildings. Examples of methods to manage surface water include those shown in Items 1–5. **Exceptions:** Additions and alterations not altering the drainage path.	N/A
ENERGY EFFICIENCY			
5.201.1	Scope	Building meets or exceeds the requirements of the *California Building Energy Efficiency Standards*	T1, T2
WATER EFFICIENCY AND CONSERVATION (Indoor Water Use)			
5.303.1	Meters	Separate meters shall be installed for the uses described in Sections 5.303.1.1 and 5.303.1.2. **5.303.1.1 New buildings or additions in excess of 50,000 square feet.** Separate submeters shall be installed as follows: 1. For each individual leased, rented or other tenant space within the building projected to consume more than 100 gal/day. 2. Where separate submeters for individual building tenants are unfeasible, for water supplied to the following subsystems: a. Makeup water for cooling towers where flow through is greater than 500 gpm (30 L/s) b. Makeup water for evaporative coolers greater than 6 gpm (0.04 L/s) c. Steam and hot-water boilers with energy input more than 500,000 Btu/h (147 kW). **5.303.1.2 Excess consumption.** Any tenant within a new building or an addition that is projected to consume more than1,000 gal/day (3800 L/day).	N/A
5.303.2	Water Reduction	Plumbing fixtures shall meet the maximum flow rate values shown in Table 5.303.2.3. **Exception:** Buildings that demonstrate 20% overall water use reduction. In this case, a calculation demonstrating a 20% reduction in the building "water use baseline", as establish in Table 5.303.2.2, shall be provided. **5.303.2.1 Areas of additions or alteration.** The provisions of Sections 5.303.2 and 5.303.3 shall apply to new fixtures in additions or areas of alterations to the building.	PI
5.303.3	Water Conserving Plumbing Fixtures and	Plumbing fixtures (water closets and urinals) and fittings (faucets and showerheads) shall comply with the following:	

SECTION	CREDIT	REQUIREMENTS	Measures provided on plan sheet:
	Fittings	**5.303.3.1 Water closets.** The effective flush volume of all water closets shall not exceed 1.28 gallons per flush. Tank-type water closets shall be certified to the performance criteria of the U.S. EPA WaterSense Specification for Tank-Type Toilets. **Note:** The effective flush volume of dual flush toilets is defined as the composite, average flush volume of two reduced flushes and one full flush. **5.303.3.2 Urinals.** The effective flush volume of urinals shall not exceed 0.5 gallons per flush. **5.303.3.3 Showerheads.** **5.303.3.3.1 Single showerheads.** Showerheads shall have a maximum flow rate of not more than 2.0 gallons per minute at 80 psi. Showerheads shall be certified to the performance criteria of the U.S. EPA WaterSense Specification for Showerheads. **5.303.3.3.2 Multiple showerheads serving one shower.** When a shower is served by more than a showerhead, the combined flow rate of all showerheads and/or other shower outlets controlled by a single valve shall not exceed 2.0 gallons per minute at 80 psi, or the shower shall be designed to allow only one shower outlet to be operated at a time. **Note:** A hand-held shower shall be considered a showerhead.	PI
5.303.4	Wastewater Reduction	Each new building shall reduce the generation of wastewater by one of the following methods: 1. The installation of water-conserving fixtures or 2. Utilizing nonpotable water systems.	N/A
5.303.6	Standards for Plumbing Fixtures and Fittings	Plumbing fixtures and fittings shall be installed in accordance with the *California Plumbing Code*, and shall meet the applicable standards referenced in Table 1401.1 of the *California Plumbing Code* and in Chapter 6 of this code.	PI
WATER EFFICIENCY AND CONSERVATION (Outdoor Water Use)			
5.304.1	Water Budget	A water budget shall be developed for landscape irrigation use that installed in conjunction with a new building or an addition or alteration.	N/A
5.304.2	Outdoor Potable Water Use	For new water service or for addition or alteration requiring upgraded water service for landscaped areas of at least 1,000 square feet but not more than 5,000 square feet, separate submeters or metering devices shall be installed for outdoor potable water use.	N/A
5.304.3	Irrigation Design	In new nonresidential construction or building addition or alteration with at least 1,000 square feet but not more than 2,500 square feet of cumulative landscaped area (the level at which the MWELO applies), install irrigation controllers and sensors which include the following criteria and meet manufacturer's recommendations: **5.304.3.1 Irrigation controllers.** Automatic irrigation system controllers installed at the time of final inspection shall comply with the following: 1. Controllers shall be weather- or soil moisture-based controllers that automatically adjust irrigation in response to changes in plants' needs as weather conditions change. 2. Weather-based controllers without integral rain sensors or communication systems that account for local rainfall shall have a separate wired or wireless rain sensor which connects or communicates with the controller(s). Soil moisture-based controllers are not required to have rain sensor input.	N/A
MATERIAL CONSERVATION & RESOURCE EFFICIENCY (Weather Resistance and Moisture Management)			
5.407.1	Weather Protection	Provide a weather-resistant exterior wall and foundation envelope as required by *California Building Code*, Section 1403.2 and *California Energy Code*, Section 150, manufacturer's installation instructions or local ordinance, whichever is more stringent.	N/A
5.407.2	Moisture Control	Employ moisture control measures by the following methods: **5.407.2.1 Sprinklers.** Prevent irrigation spray on structures. **5.407.2.2 Entries and openings.** Design exterior entries and openings to prevent water intrusion into buildings as follows: **5.407.2.2.1 Exterior door protection.** Primary exterior entries shall be covered to prevent water intrusion by using nonabsorbent floor and wall finishes within at least 2 feet around and perpendicular to such openings plus at least one of the following: 1. An installed awning at least 4 feet in depth. 2. The door is protected by a roof overhang at least 4 feet in depth. 3. The door is recessed at least 4 feet. 4. Other methods which provide equivalent protection. **5.407.2.2.2 Flashing.** Install flashings integrated with a drainage plane.	N/A

SECTION	CREDIT	REQUIREMENTS	Measures provided on plan sheet:
MATERIAL CONSERVATION & RESOURCE EFFICIENCY (Construction Waste Reduction, Disposal & Recycling)			
5.408.1	Construction Waste Management	Recycle and/or salvage for reuse a minimum of 50% of the nonhazardous construction and demolition waste in accordance with Section 5.408.1.1, 5.408.1.2 or 5.408.1.3, or meet a local construction and demolition waste management ordinance, whichever is more stringent.	CONTR.
5.408.1.1	Construction waste management plan	Where a local jurisdiction does not have a construction and demolition waste management ordinance that is more stringent, submit a construction waste management plan that complies with Items 1 through 4 of this section.	CONTR.
5.408.1.2	Waste management company	Utilize a waste management company that can provide verifiable documentation that the percentage of construction and demolition waste material diverted from the landfill complies with this section. **Exceptions to Sections 5.408.1.1 and 5.408.1.2:** 1. Excavated soil and land-clearing debris 2. Alternate waste reduction methods developed by working with local agencies if diversion or recycle facilities capable of compliance with this item do not exist. 3. Demolition waste meeting local ordinance or calculated in consideration of local recycling facilities and markets	CONTR.
5.408.1.4	Documentation	Provide documentation of the waste management plan that meets the requirements listed in Sections 5.408.1.1 through 5.408.1.3, and the plan is accessible to the enforcement authority.	CONTR.
5.408.2	Isolated jobsites	The enforcing agency may make exceptions to the requirements of this section when jobsites are located in areas beyond the haul boundaries of the diversion facility.	
5.408.3	Excavated soil and land clearing debris	100 percent of trees, stumps, rocks and associated vegetation and soils resulting primarily from land clearing shall be reused or recycled. **Exception:** Reuse, either on-or off-site, of vegetation or soil contaminated by disease or pest infestation.	N/A
MATERIAL CONSERVATION & RESOURCE EFFICIENCY (Building Maintenance and Operation)			
5.410.1	Recycling by Occupants	Provide readily accessible areas that serve the entire building and are identified for the depositing, storage and collection of nonhazardous materials for recycling. **5.410.1.1 Additions.** For additions conducted within a 12-month period under single or multiple permits, resulting in an increase of 30% or more in floor area, shall provide recycling areas on site. **Exception:** addition within a tenant space resulting in less than a 30% increase in the tenant space floor area.	N/A
5.410.2	Commissioning	For new buildings 10,000 square feet and over, building commissioning for all building systems covered by Title 24, Part 6, process systems and renewable energy systems shall be included in the design and construction processes of the building project. Commissioning requirements shall include items listed in Section 5.410.2. **Exceptions:** 1. Dry storage warehouses of any size 2. Areas under 10,000 square feet used for offices or other conditioned accessory spaces within dry storage warehouses 3. Tenant improvements under 10,000 sqft as described in Section 303.1.1. 4. Commissioning requirements for energy systems covered by the 2013 *California Energy Code*	N/A
5.410.2.1	Owner's Project Requirements (OPR)	Documented before the design phase of the project begins the OPR shall include items listed in Section 5.410.2.1.	N/A
5.410.2.2	Basis of Design (BOD)	Written explanation of how the design of the building systems meets the OPR shall be completed at the design phase of the building project to cover the systems listed in Section 5.410.2.2.	N/A
5.410.2.3	Commissioning Plan	A commissioning plan describing how the project will be commissioned shall include items listed in Section 5.410.2.3.	N/A
5.410.2.4	Functional Performance Testing	Functional performance testing shall demonstrate the correct installation and operation of each component, system and system-to-system interface in accordance with the approved plans and specifications.	N/A
5.410.2.5	Documentation and Training	A Systems manual and a systems operations training are required. **5.410.2.5.1 Systems manual.** The systems manual shall be delivered to the building owner or representative and facilities operator and shall include the items listed in Section 5.410.2.5.1. **5.410.2.5.2 Systems operations training.** A program for training of the appropriate maintenance staff for each equipment	N/A

SECTION	CREDIT	REQUIREMENTS	Measures provided on plan sheet:
		type and/or system shall be developed and shall include items listed in Section 5.410.2.5.2.	
5.410.2.6	Commissioning Report	A report of commissioning process activities undertaken through the design and construction phases of the building project shall be completed and provided to the owner or representative.	N/A
5.410.4	Testing and Adjusting	Testing and adjusting of systems shall be required for new buildings less than 10,000 square feet or new systems to serve an addition or alteration subject to Section 303.1. **5.410.4.2 Systems.** Develop a written plan of procedures for testing and adjusting systems. Systems to be included for testing and adjusting shall include, as applicable to the project, the systems listed in Section 5.410.4.2. **5.410.4.3 Procedures.** Perform testing and adjusting procedures in accordance with applicable standards on each system as determined by the enforcing agency, as shown in Table 5.410.4.3. **5.410.4.3.1 HVAC balancing.** Before a new space-conditioning system serving a building or space is operated for normal use, balance in accordance with the procedures defined by national standards listed in Section 5.410.4.3.1 or as approved by the enforcing agency. **5.410.4.4 Reporting.** After completion of testing, adjusting and balancing, provide a final report of testing signed by the individual responsible for performing these services. **5.410.4.5 Operation and maintenance manual.** Provide the building owner with detailed operating and maintenance instructions and copies of guarantees/warranties for each system prior to final inspection. **5.410.4.5.1 Inspection and reports.** Include a copy of all inspection verifications and reports required by the enforcing agency.	N/A
ENVIRONMENTAL QUALITY (Fireplaces)			
5.503.1	General	Install only a direct-vent sealed-combustion gas or sealed wood-burning fireplace or a sealed woodstove or pellet stove, and refer to residential requirements in the *California Energy Code*, Title 24, Part 6, Subchapter 7, Section 150.	N/A
5.503.1.1	Woodstoves	Woodstoves and pellet stoves shall comply with U.S. EPA Phase II emission limits where applicable.	N/A
ENVIRONMENTAL QUALITY (Pollutant Control)			
5.504.1.3	Temporary Ventilation	If the HVAC system is used during construction, use return air filters with a Minimum Efficiency Reporting Value (MERV) of 8, based on ASHRAE 52.2-1999, or an average efficiency of 30% based on ASHRAE 52.1-1992. Replace all filters immediately prior to occupancy, or, if building is occupied during alteration, at the conclusion of construction.	N/A
5.504.3	Covering of Duct Openings and Protection of Mechanical Equipment During Construction	At the time of rough installation and during storage on the construction site and until final startup of the heating, cooling and ventilating equipment, all duct and other related air distribution component openings shall be covered with tape, plastic, sheet metal or other methods acceptable to the enforcing agency to reduce the amount of dust, water and debris which may enter the system.	N/A
5.504.4	Finish Material Pollutant Control	Finish materials shall comply with Sections 5.504.4.1 through 5.504.4.4.	
5.504.4.1	Adhesives, Sealants and Caulks	Adhesives and sealants used on the project shall meet the requirements of the following standards: 1. Adhesives, adhesive bonding primers, adhesive primers, sealants, sealant primers and caulks shall comply with local or regional air pollution control or air quality management district rules where applicable or SCAQMD Rule 1168 VOC limits, as shown in Tables 5.504.4.1 and 5.504.4.2. 2. Aerosol adhesives and smaller unit sizes of adhesives and sealant or caulking compounds (in units of product, less packaging, which do not weigh more than one pound and do not consist of more than 16 fluid ounces) shall comply with statewide VOC standards and other requirements, including prohibitions on use of certain toxic compounds, of *California Code of Regulations*, Title 17, commencing with Section 94507.	GR-1
5.504.4.3	Paints and Coatings	Architectural paints and coatings shall comply with Table 5.504.4.3 unless more stringent local limits apply. **5.504.4.3.1 Aerosol paints and coatings.** Aerosol paints and coatings shall meet the Product-Weighted MIR Limits for ROC in Section 94522(a)(3) and other requirements, including prohibitions on use of certain toxic compounds and ozone depleting substances (CCR, Title 17, Section 94520 et seq). **5.504.4.3.2 Verification.**	GR-1

SECTION	CREDIT	REQUIREMENTS	Measures provided on plan sheet:
		Verification of compliance with this section shall be provided at the request of the enforcing agency.	
5.504.4.4	Carpet Systems	All carpet installed in the building interior shall meet the testing and product requirements of one of the standards listed in Section 5.504.4.4. **5.504.4.4.1 Carpet cushion.** All carpet cushion installed in the building interior shall meet the requirements of the Carpet and Rug Institute's Green Label program. **5.504.4.4.2 Carpet adhesive.** All carpet adhesive shall meet the requirements of Table 5.504.4.1.	N/A
5.504.4.5	Composite Wood Products	Hardwood plywood, particleboard and medium density fiberboard composite wood products used on the interior or exterior of the building shall meet the requirements for formaldehyde as specified in ARB's (Air Toxic Control Measure/ATCM) for Composite Wood (17 CCR 93120 et seq.). Those materials not exempted under the ACTM must meet the specified emission limits, as shown in Table 5.504.4.5. **5.504.4.5.3 Documentation.** Verification of compliance with this section shall be provided as requested by the enforcing agency. Documentation shall include at least one of the following: 1. Product certifications and specifications 2. Chain of custody certifications 3. Product labeled and invoiced as meeting the Composite Wood Products regulation (see CCR, Title 17, Section 93120, et seq.) 4. Exterior grade products marked as meeting the PS-1 or PS-2 standards of the Engineered Wood Association, the Australian AS/NZS 2269 or European EN 300 standards. 5. Other methods acceptable to the enforcing agency.	N/A
5.504.4.6	Resilient Flooring Systems	For 80% of floor area receiving resilient flooring, installed resilient flooring shall meet at least one of the following: 1. Certified under the Resilient Floor Covering Institute (RFCI) FloorScore program; 2. Compliant with the VOC-emission limits and testing requirements specified in the California Department of Public Health's 2010 Standard Method for Testing and Evaluation Chambers, Version 1.1, February 2010; 3. Compliant with the California Collaborative for High Performance Schools (CA-CHPS) Criteria documentation for EQ 2.2 dated July 2012 and listed in the CHPS High Performance product Database; or 4. Compliant with CDPH criteria as certified under the Greenguard Children's & School Program. **5.504.4.6.1 Verification of compliance.** Documentation shall be provided verifying that resilient flooring materials meet the pollutant emission limits.	GR-1
5.504.5.3	Filters	In mechanically ventilated buildings, provide regularly occupied areas of the building with air filtration media for outside and return air that provides at least a MERV of 8. MERV 8 filters shall be installed prior to occupancy, and recommendations for maintenance with filters of the same value shall be included in the operation and maintenance manual. **Exceptions:** 1. An ASHRAE 10% to 15% efficiency filter shall be permitted for an HVAC unit meeting the 2013 *California Energy Code* having 60,000 Btu/h or less capacity per fan coil, if the energy use of the air delivery system is 0.4 W/cfm or less at design air flow. 2. Existing mechanical equipment. **5.504.5.3.1 Labeling.** Installed filters shall be clearly labeled by the manufacturer indicating the MERV rating.	MI
5.504.7	Environmental Tobacco Smoke (ETS) Control	Prohibit smoking within 25 feet of building entries, outdoor air intakes and operable windows where outdoor areas are provided for smoking and within the building as already prohibited by other laws or regulations; or as enforced by ordinances, regulations or policies of any city, county, city and county, *California Community College*, campus of the California State University or campus of the University of California, whichever are more stringent.	A1.0
ENVIRONMENTAL QUALITY (Indoor Moisture Control)			
5.505.1	Indoor Moisture Control	Buildings shall meet or exceed the provisions of 2013 *California Building Code*, CCR, Title 24, Part 2, Sections 1203 (Ventilation) and Chapter 14 (Exterior Walls).	
ENVIRONMENTAL QUALITY (Indoor Air Quality)			
5.506.1	Outside Air Delivery	For mechanically or naturally ventilated spaces in buildings, meet the minimum requirements of Section 121 of the *California Energy Code* and Chapter 4 of CCR, Title 8 or the applicable local code, whichever is more stringent.	T1, T2

SECTION	CREDIT	REQUIREMENTS	Measures provided on plan sheet:
5.506.2	Carbon Dioxide (CO_2) Monitoring	For buildings or additions equipped with demand control ventilation, CO2 sensors and ventilation controls shall be specified and installed in accordance with the requirements in the 2013 *California Energy Code*, Section 121(c)(4).	
ENVIRONMENTAL QUALITY (Environmental Comfort)			
5.507.4	Acoustical Control	Employ building assemblies and components with STC values determined in accordance with ASTM E 90 and ASTM E 413 or OITC determined in accordance with ASTM E 1332, using either the prescriptive or performance method in Section 5.507.4.1 or 5.507.4.2.	N/A
5.507.4.1	Prescriptive Method	Wall and floor-ceiling assemblies exposed to the noise source making up the building or addition envelope or altered envelope shall meet a composite STC rating of at least 50 or a composite OITC rating of no less than 40, with exterior windows of a minimum STC of 40 or OITC of 30 in the following locations: 1. Within the 65 CNEL noise contour of an airport. 2. Within the 65 CNEL or L_{dn} noise contour of a freeway or expressway, railroad, industrial source or fixed-guideway source as determined by the Noise Element of the General Plan. **5.507.4.1.1 Noise exposure where noise contours are not readily available.** Buildings exposed to a noise level of 65 dB L_{eq}(1H) during any hour of operation shall have building, addition, or alteration exterior wall and roof-ceiling assemblies exposed to the noise source meeting a composite STC rating of at least 45 (or OITC 35), with exterior windows of a minimum STC of 40 (or OITC 30).	N/A
5.507.4.2	Performance Method	For buildings located as defined in Sections A5.507.4.1 or A5.507.4.1.1, wall and roof-ceiling assemblies making up the building or addition envelope or altered envelope shall be constructed to provide an interior noise environment attributable to exterior sources that does not exceed an hourly equivalent noise level (L_{eq} 1Hr) of 50 dBA in occupied areas during any hour of operation. **5.507.4.2.1 Site features.** Exterior features such as sound walls or earth berms may be utilized as appropriate to the building, addition or alteration project to mitigate sound migration to the interior. **5.507.4.2.2 Documentation of compliance.** An acoustical analysis documenting complying interior sound levels shall be prepared by personnel approved by the architect or engineer of record. **5.507.4.3 Interior sound transmission.** Wall and floor-ceiling assemblies separating tenant spaces and tenant spaces and public places shall have an STC of at least 40.	N/A
ENVIRONMENTAL QUALITY (Outdoor Air Quality)			
5.508.1	Ozone Depletion and Greenhouse Gas Reductions	Installations of HVAC, refrigeration, and fire suppression equipment shall comply with Sections 5.508.1.1 and 5.508.1.2. **5.508.1.1 Chlorofluorocarbons (CFCs).** Install HVAC, refrigeration & fire suppression equipment that do not contain CFC. **5.508.1.2 Halons.** Install HVAC, refrigeration & fire suppression equipment that do not contain Halon.	MI
5.508.2	Supermarket Refrigerant Leak Reduction	New commercial refrigeration systems shall comply with the provisions of this section when installed in retail food stores 8,000 sqft or more conditioned area, and that utilize either refrigerated display cases, or walk-in coolers or freezers connected to remote compressor units or condensing units. The leak reduction measures apply to refrigeration systems containing high-global-warming potential (high-GWP) refrigerants with a GWP of 150 or greater. New refrigeration systems include both new facility and the replacement of existing refrigeration systems in existing facilities. **Exception:** refrigeration systems containing low-global-warming potential (low-GWP) refrigerant with a GWP value less than 150 are not subject to this section. Low-GWP refrigerants are nonozone-depleting refrigerants that include ammonia, carbon dioxide (CO_2), and potentially other refrigerants.	N/A
5.508.2.1	Refrigerant Piping	Piping compliant with the *California Mechanical code* shall be installed to be accessible for leak protection and repairs. Piping runs using threaded pipe, copper tubing with an outside diameter (OD) less than ¼". flared tubing connection and short radius elbows shall not be used in refrigerant systems except as noted below. **5.508.2.1.1 Threaded pipe.** Threaded connections are permitted at the compressor rack. **5.508.2.1.2 Copper pipe.** Copper tubing with an OD less than ¼" may be used in systems with a refrigerant charge of 5 pounds or less. **5.508.2.1.2.1 Anchorage.** ¼" OD tubing shall be securely clamped to a rigid base to keep vibration levels below 8 mils.	N/A

SECTION	CREDIT	REQUIREMENTS	Measures provided on plan sheet:
5.508.2.2	Valves	**5.508.2.1.3 Flared tubing connections.** Double-flared tubing connections may be used for pressure controls, valve pilot lines and oil. **Exception:** Single-flared tubing connections may be used with a multiring seal coated with industrial sealant suitable for use with refrigerants and tightened in accordance with manufacturer's recommendations. **5.508.2.1.4 Elbows.** Short radius elbows are only permitted where space limitations prohibit use of long radius elbows. Valves and fittings shall comply with the *California Mechanical Code* and as follows: **5.508.2.2.1 Pressure relief valves.** For vessels containing high-GWP refrigerant, a rupture disc shall be installed between the outlet of the vessel and the inlet the pressure relief valve. **5.508.2.2.1.1 Pressure detection.** A pressure gauge, pressure transducer or other device shall be installed in the space between the rupture disc and the relief valve inlet to indicate a disc rupture or discharge of the relief valve. **5.508.2.2.2 Access valves.** Only Schrader access valves with a brass or steel body are permitted for use. **5.508.2.2.2.1 Valves caps.** For systems with a refrigerant charge of 5 pounds or more, valve caps shall be brass or steel and not plastic. **5.508.2.2.2.2 Seal caps.** If designed for it, the cap shall have a neoprene O-ring in place. **5.508.2.2.2.2.1 Chain tethers.** Chain tethers to fit over the stem are required for valves designed to have seal caps. **Exceptions:** Valves with seal caps that are not removed from the valve during stem operation.	N/A
5.508.2.3	Refrigerated Service Cases	Refrigerated service cases holding food products containing vinegar and salt shall have evaporator coils of corrosion-resistant material, such as stainless steel, or be coated to prevent corrosion from these substances. **5.508.2.3.1 Coil coating.** Consideration shall be given to the heat transfer efficiency of coil coating to maximize energy efficiency.	N/A
5.508.2.4	Refrigerant Receivers	Refrigerant receivers with capacities greater than 200 pounds shall be fitted with a device that indicates the level of refrigerant in the receiver.	N/A
5.508.2.5	Pressure Testing	The systems shall be pressure tested during installation prior to evacuation & charging. **5.508.2.5.1 Minimum pressure.** The system shall be charged with regulated dry nitrogen and appropriate tracer gas to bring system pressure up to 300 psig minimum. **5.508.2.5.2 Leaks.** Check the system for leaks, repair any leaks, and retest for pressure using the same gauge. **5.508.2.5.3 Allowable pressure change.** The system shall stand, unaltered, for 24 hours with no more than a +/- one pound pressure change from 300 psig, measured with the same gauge.	N/A
5.508.2.6	Evacuation	The system shall be evacuated after pressure testing prior to charging. **5.508.2.6.1 First vacuum.** Pull a system vacuum down to at least 1000 microns (+/- 50 microns), and hold down for 30 minutes. **5.508.2.6.2 Second vacuum.** Pull a system vacuum to a minimum of 500 microns and hold for 30 minutes. **5.508.2.6.3 Third vacuum.** Pull a third vacuum down to a minimum of 300 microns, and hold for 24 hours with a maximum drift of 100 microns over a 24-hour period.	N/A

VOC AND FORMALDEHYDE LIMITS

FORM GRN 11

TABLE 4.504.1
ADHESIVE VOC LIMIT [1, 2]
Less Water and Less Exempt Compounds in Grams per Liter

ARCHITECTURAL APPLICATIONS	CURRENT VOC LIMIT
Indoor carpet adhesives	50
Carpet pad adhesives	50
Outdoor carpet adhesives	150
Wood flooring adhesive	100
Rubber floor adhesives	60
Subfloor adhesives	50
Ceramic tile adhesives	65
VCT and asphalt tile adhesives	50
Drywall and panel adhesives	50
Cove base adhesives	50
Multipurpose construction adhesives	70
Structural glazing adhesives	100
Single-ply roof membrane adhesives	250
Other adhesives not specifically listed	50
SPECIALTY APPLICATIONS	
PVC welding	510
CPVC welding	490
ABS welding	325
Plastic cement welding	250
Adhesive primer for plastic	550
Contact adhesive	80
Special purpose contact adhesive	250
Structural wood member adhesive	140
Top and trim adhesive	250
SUBSTRATE SPECIFIC APPLICATIONS	
Metal to metal	30
Plastic foams	50
Porous material (except wood)	50
Wood	30
Fiberglass	80

[1] If an adhesive is used to bond dissimilar substrates together, the adhesive with the highest VOC content shall be allowed.
[2] For additional information regarding methods to measure the VOC content specified in this table, see *South Coast Air Quality Management District Rule 1168*.

TABLE 4.504.2
SEALANT VOC LIMIT
Leds Water and Less Exempt Compounds in Grams per Liter

SEALANTS	CURRENT VOC LIMIT
Architectural	250
Marine deck	760
Nonmembrane roof	300
Roadway	250
Single-ply roof membrane	450
Other	420
SEALANT PRIMERS	
Architectural	
Nonporous	250
Porous	775
Modified bituminous 500	500
Marine deck	760
Other	750

TABLE 4.504.5
FORMALDEHYDE LIMITS[1]
Maximum Formaldehyde Emissions in Parts per Million

PRODUCT	CURRENT LIMIT	JAN 1, 2012	JULY 1, 2012
Hardwood plywood veneer core	0.05		
Hardwood plywood composite core	0.08		0.05
Particleboard	0.09		
Medium density fiberboard	0.11		
Thin medium density fiberboard[4]	0.21	0.13	

Notes: Values in this table are derived from those specified by the California Air Resources Board, Architectural Coatings Suggested Control Measure, February 1, 2008. More information is available from the Air Resources Board.

TABLE 4.504.3
VOC CONTENT LIMITS FOR ARCHITECTURAL COATINGS[1, 2]
Grams of VOC per Liter of Coating,
Less Water and Less Exempt Compounds

COATING CATEGORY	EFFECTIVE 1/1/2010	EFFECTIVE 1/1/2012
Flat coatings	50	
Nonflat coatings	100	
Nonflat high gloss coatings	150	
Specialty Coatings		
Aluminum roof coatings	400	
Basement specialty coatings	400	
Bituminous roof coatings	50	
Bituminous roof primers	350	
Bond breakers	350	
Concrete curing compounds	350	
Concrete/masonry sealers	100	
Driveway sealers	50	
Dry fog coatings	150	
Faux finishing coatings	350	
Fire resistive coatings	350	
Floor coatings	100	
Form-release compounds	250	
Graphic arts coatings (sign paints)	500	
High temperature coatings	420	
Industrial maintenance coatings	250	
Low solids coatings[3]	120	
Magnesite cement coatings	450	
Mastic texture coatings	100	
Metallic pigmented coatings	500	
Multicolor coatings	250	
Pretreatment wash primers	420	
Primers, sealers, and undercoaters	100	
Reactive penetrating sealers	350	
Recycled coatings	250	
Roof coatings	50	
Rust preventative coatings	400	250
Shellacs		
Clear	730	
Opaque	550	
Specialty primers, sealers and undercoaters	350	100
Stains	250	
Stone consolidants	450	
Swimming pool coatings	340	
Traffic marking coatings	100	
Tub and tile refinish coatings	420	
Waterproofing membranes	250	
Wood coatings	275	
Wood preservatives	350	
Zinc-rich primers	340	

[1] Grams of VOC per liter of coating, including water and including exempt compounds.
[2] The specified limits remain in effect unless revised limits are listed in subsequent columns in the table.
[3] Values in this table are derived from those specified by the California Air Resources Board, Architectural Coatings Suggested Control Measure, February 1, 2008. More information is available from the Air Resources Board.

DESIGN ENGINEER'S SEAL & SIGNATURE:

LICENSED ARCHITECT
GARY T. HIPOLITE
No. C13681
January 31, 2017
STATE OF CALIFORNIA

PREPARED UNDER THE SUPERVISION OF:

designua
PLANNING AND DESIGN
12832 Valley View Street | Suite C | Garden Grove | CA | 92845
Phone 714.892-3900 | Fax 714.892-3944

Underground Service Alert
Call: TOLL FREE
1(800) 422-4133
TWO WORKING DAYS BEFORE YOU DIG

REVISIONS

NO.	DESCRIPTION	DATE
PC	PLAN CHECK CORRECTION	03/30/15
	BID SET	04/10/15

REFERENCES

APPROVED BY:

CITY ENGINEER RCE: DATE:

DATE:	03/09/15
SCALE (H):	
SCALE (V):	
DRAWN BY:	D.L.
CHECKED BY:	G.H.

SHEET TITLE: GREEN BUILDING

PROJECT NAME AND ADDRESS:

5414 LA PALMA AVE., LA PALMA, CA

CITY PROJECT NO.

SHEET NO. GR—1
GREEN BUILDING

SHEET OF

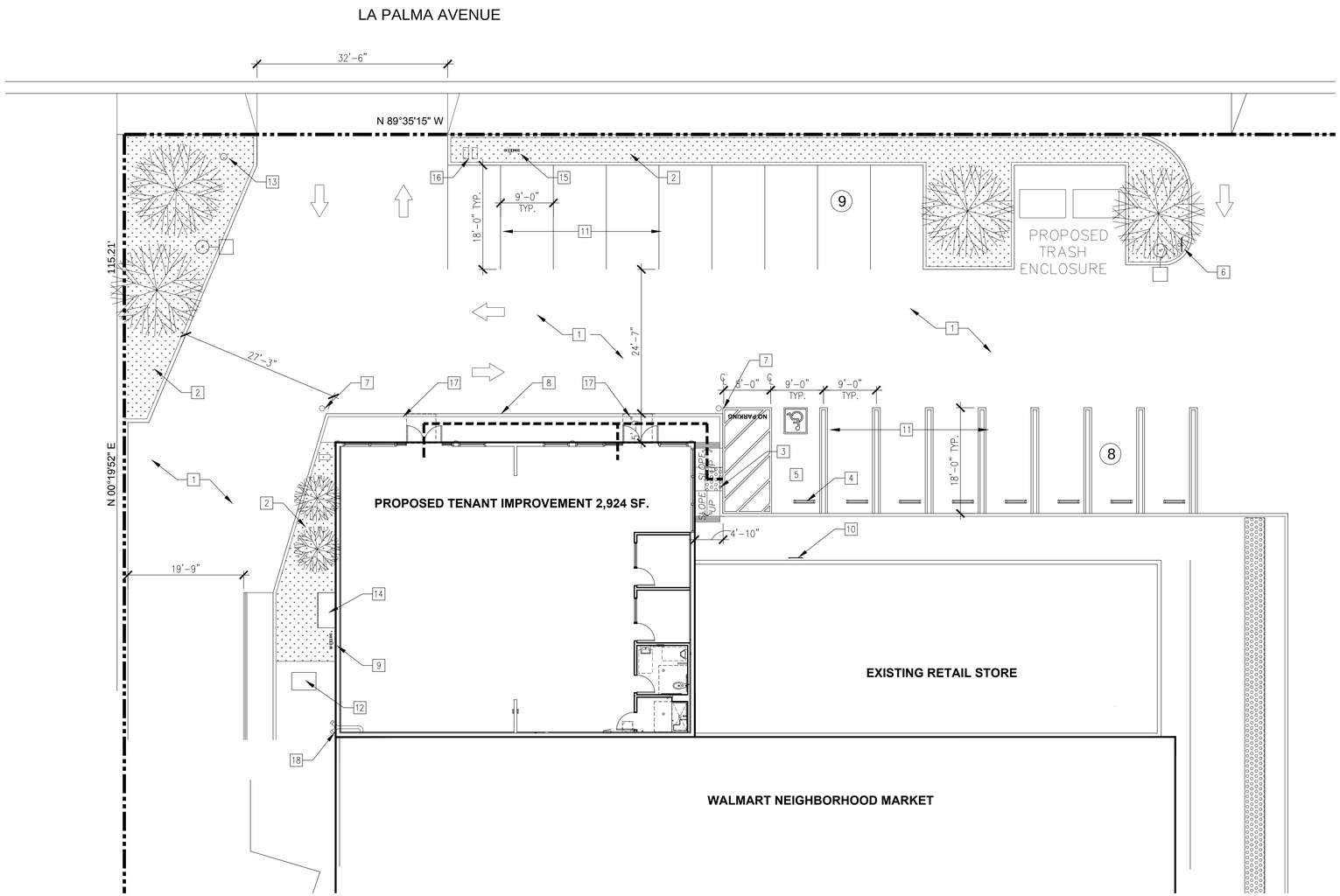

PROJECT NORTH

SITE PLAN KEYNOTES

MARK	DESCRIPTION OF WORK	DETAIL
1	(E) ASPHALT CONCRETE PAVING TO REMAIN	
2	EXISTING LANDSCAPING W/ IRRIGATION SYSTEM TO REMAIN	
3	(E) ACCESSIBLE CURB RAMP WITH 8% MAX. SLOPE,2% MAX. CROSS SLOPE, W/TRUNCATED DOMES, AND 12" GROOVED BORDER	
4	(E) WHEEL STOP TO REMAIN	
5	(E) ACCESSIBLE STALL; THE MAXIMUM SLOPE IN THE ACCESSIBLE PARKING STALL AND THE LOADING AREA SHALL BE 2% MAX. IN ANY DIRECTION	
6	(E) UNAUTHORIZED PARKING SIGN	CV1.1 NOTES
7	(E) BOLLARD "PAINT YELLOW"	
8	(E) CONC. CURB AND WALK TO REMAIN	
9	(E) GAS METER	
10	(E) WALL MOUNTED VAN ACCESSIBLE PARKING SIGN	CV1.1 NOTES
11	(E) PARKING STALL STRIPING	
12	(E) ELECTRICAL TRANSFORMER TO REMAIN, PROTECT IN PLACE	
13	(E) FIRE HYDRANT TO REMAIN	
14	(E) ELECTRICAL SWITCHGEAR TO REMAIN	
15	(E) BACKFLOW METER TO REMAIN	
16	(E) WATER METER TO REMAIN	
17	5'x5' LANDING @ EXT. DOOR W/ MAX. 2% RUNNING/CROSS SLOPE AWAY FROM BUILDING	
18	(E) FIRE DEPT CONNECTION FOR ADJACENT BUILDING TO REMAIN	

EXISTING PROPERTY LINE

ACCESSIBLE PATH OF TRAVEL MAXIMUM 2% CROSS SLOPE AND MAXIMUM 5% SLOPE IN THE DIRECTION OF TRAVEL. NO ABRUPT CHANGES IN ELEVATION ALONG THE PATH OF TRAVEL SHOWN.

LOADING/UNLOADING AND ACCESSIBLE PEDESTRIAN WALKWAY (W/ 2% MAX. SLOPE) STRIPING

(E) LANDSCAPE PLANTERS, IRRIGATIONS SYSTEMS, PLANTS, ETC. TO REMAIN, PROTECT IN PLACE

(E) DESIGNATED ACCESSIBLE PARKING STALL

EXISTING PARKING LOT LIGHT POLE TO REMAIN U.N.O.

EXISTING TREES TO REMAIN, PROTECT IN PLACE

PARKING STALL COUNT

SITE LEGEND

PARKING ANALYSIS

EXISTING PARKING COUNT
STALLS 16
ACCESSIBLE PARKING 1
TOTAL PROVIDED 17

DESIGN ENGINEER'S SEAL & SIGNATURE:

LICENSED ARCHITECT
GARY T. HIPOLITE
No. C13681
January 31, 2017
STATE OF CALIFORNIA

PREPARED UNDER THE SUPERVISION OF:

designua
PLANNING AND DESIGN
12832 Valley View Street | Suite C | Garden Grove | CA | 92845
Phone 714.892-3900 | Fax 714.892-3944

SITE PLAN

SCALE: 3/32"=1'-0"

Underground Service Alert
Call: TOLL FREE
1(800) 422-4133
TWO WORKING DAYS BEFORE YOU DIG

REVISIONS

NO.	DESCRIPTION	DATE
PC1	PLAN CHECK CORRECTION	03/30/15
	BID SET	04/10/15

REFERENCES

APPROVED BY:

CITY ENGINEER RCE: DATE:

DATE:	03/09/15
SCALE (H):	
SCALE (V):	
DRAWN BY:	D.L.
CHECKED BY:	G.H.

SHEET TITLE: PROPOSED SITE PLAN

PROJECT NAME AND ADDRESS:

5414 LA PALMA AVE., LA PALMA, CA

CITY PROJECT NO.

SHEET NO. A0.1
PROPOSED SITE PLAN

SHEET OF

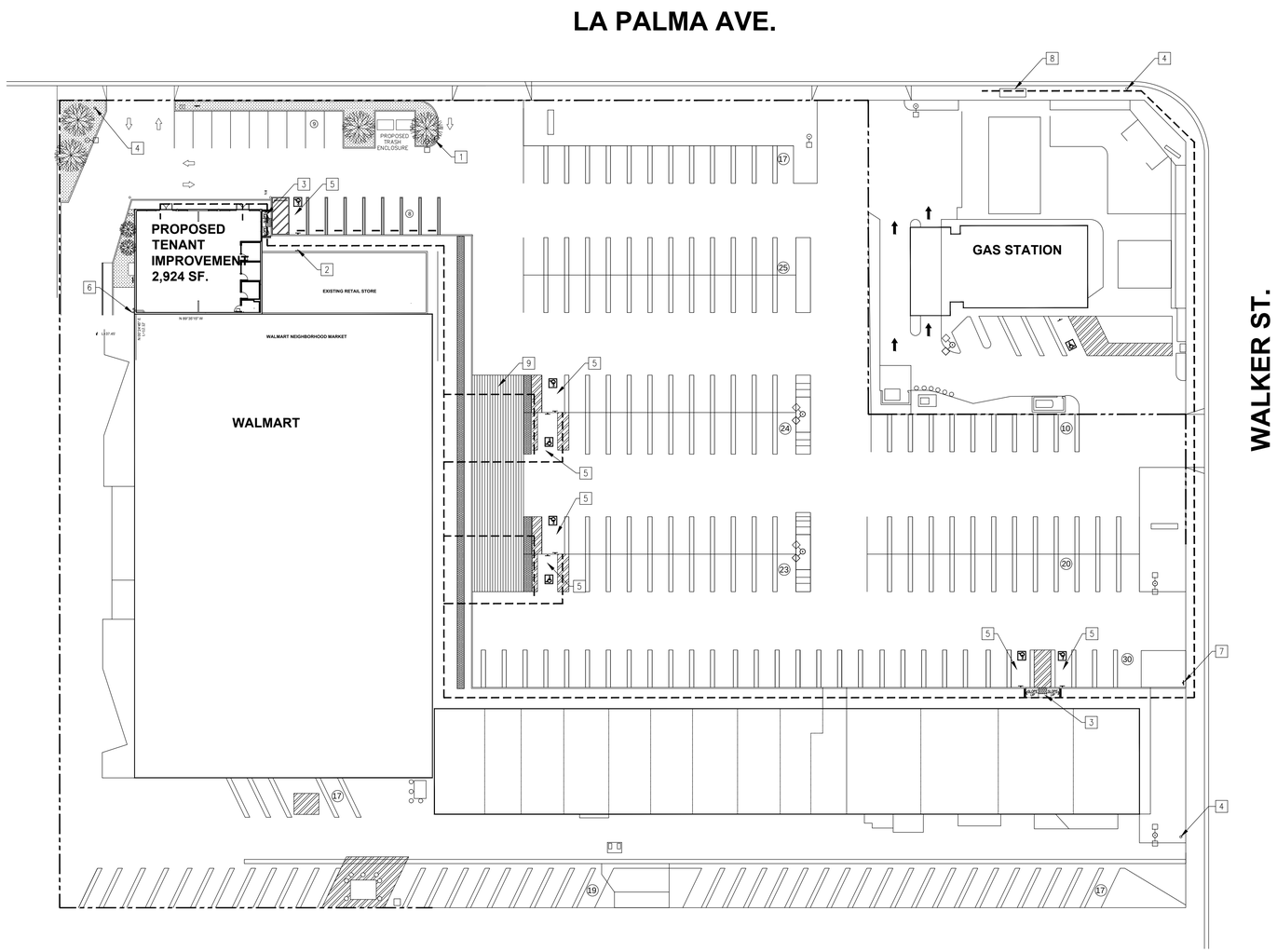

LOT SITE

SCALE: 1/32"=1'-0"

SITE PLAN KEYNOTES

MARK	DESCRIPTION OF WORK	DETAIL
1	(E) UNAUTHORIZED PARKING SIGN	CV1.1 NOTES
2	(E) COMPLIANT WALL MOUNTED VAN ACCESSIBLE PARKING SIGN	
3	(E) ACCESSIBLE CURB RAMP WITH 8%MAX. SLOPE,2%MAX. CROSS SLOPE, W/TRUNCATED DOMES, AND 12" GROOVED BORDER	
4	(E) FIRE HYDRANT TO REMAIN	
5	(E) ACCESSIBLE STALL; THE MAXIMUM SLOPE IN THE ACCESSIBLE PARKING STALL AND THE LOADING AREA SHALL BE 2% MAX. IN ANY DIRECTION	
6	(E) FIRE DEPT CONNECTION FOR ADJACENT BUILDING TO REMAIN	
7	(E) ACCESSIBLE PATH OF TRAVEL & SIGN, INDICATING PATH OF TRAVEL FROM PUBLIC WAY TO ACCESSIBLE BUILDING ENTRANCES	
8	(E) BUS STOP	CV1.1 NOTES
9	ACCESSIBLE STRIPING, PATH OF TRAVEL	

EXISTING PROPERTY LINE

ACCESSIBLE PATH OF TRAVEL MAXIMUM 2% CROSS SLOPE AND MAXIMUM 5% SLOPE IN THE DIRECTION OF TRAVEL. NO ABRUPT CHANGES IN ELEVATION ALONG THE PATH OF TRAVEL SHOWN.

LOADING/UNLOADING AND ACCESSIBLE PEDESTRIAN WALKWAY (W/ 2% MAX. SLOPE) STRIPING

(E) LANDSCAPE PLANTERS, IRRIGATIONS SYSTEMS, PLANTS, ETC. TO REMAIN, PROTECT IN PLACE

(E) DESIGNATED ACCESSIBLE PARKING STALL

EXISTING PARKING LOT LIGHT POLE TO REMAIN U.N.O.

PARKING STALL COUNT

SITE LEGEND

DESIGN ENGINEER'S SEAL & SIGNATURE:

LICENSED ARCHITECT
GARY T. HIPOLITE
No. C13681
January 31, 2017
STATE OF CALIFORNIA

PREPARED UNDER THE SUPERVISION OF:

designum
PLANNING AND DESIGN
12832 Valley View Street | Suite C | Garden Grove | CA | 92845
Phone 714.892-3900 | Fax 714.892-3944

Underground Service Alert
Call: TOLL FREE
1(800) 422-4133
TWO WORKING DAYS BEFORE YOU DIG

REVISIONS

NO.	DESCRIPTION	DATE
PC1	PLAN CHECK CORRECTION	03/30/15
	BID SET	04/10/15

REFERENCES

APPROVED BY:

CITY ENGINEER RCE: DATE:

DATE:	03/09/15
SCALE (H):	
SCALE (V):	
DRAWN BY:	D.L.
CHECKED BY:	G.H.

SHEET TITLE: LOT SITE

PROJECT NAME AND ADDRESS:

5414 LA PALMA AVE., LA PALMA, CA

CITY PROJECT NO.

SHEET NO. A0.2
LOT SITE

SHEET OF

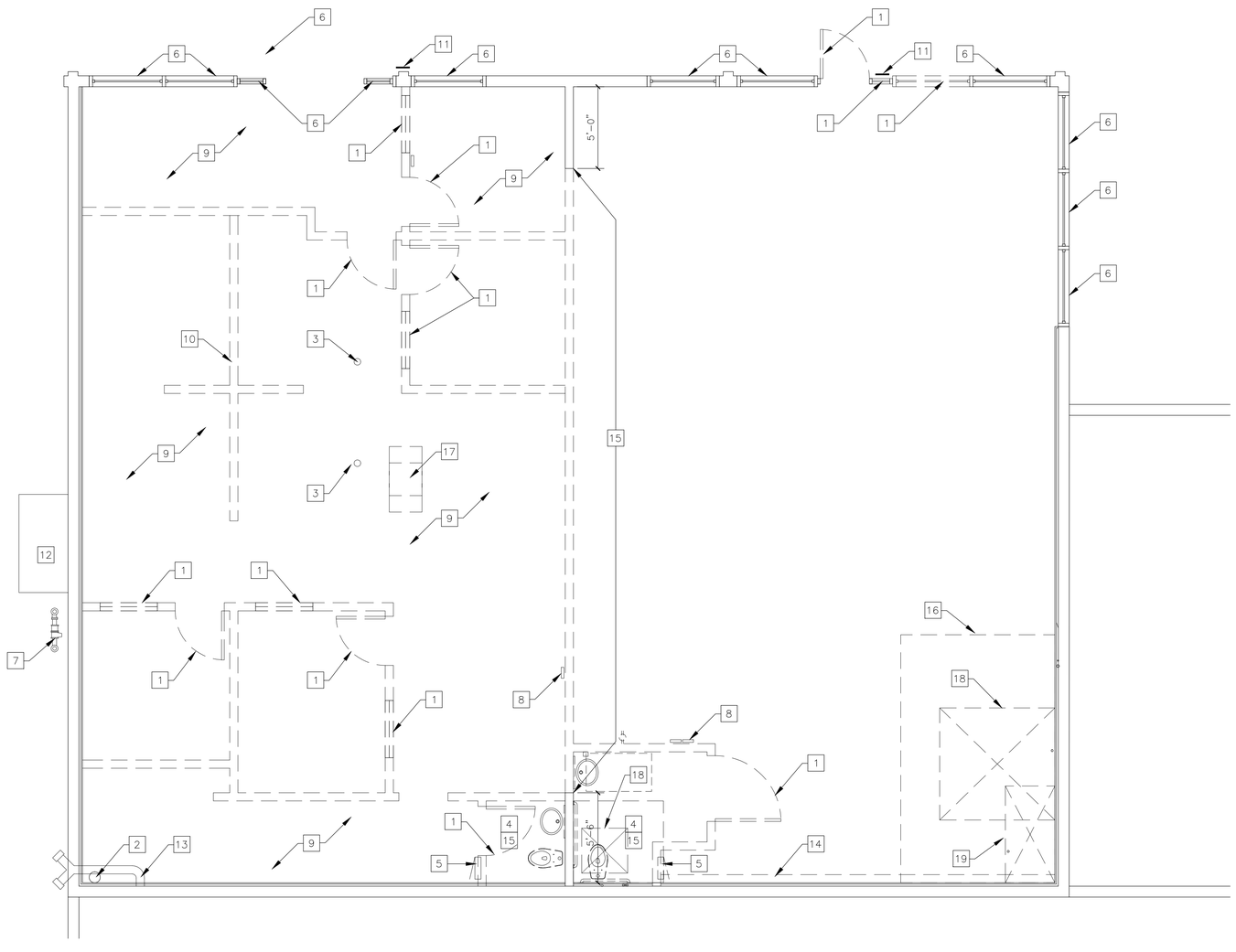

1 REMOVE (E) DOOR/WINDOW (SEE SHEET A1.0)
2 (E) FIRE EXTINGUISHER TO REMAIN
3 REMOVE EXISTING FLOOR OUTLET. INFILL CONC. SLAB
4 REMOVE ALL PLUMBING FIXTURES. CAP OFF FLUSH WITH FLOOR
5 (E) ELECTRICAL PANEL TO BE RELOCATED
6 (E) DOOR/WINDOW ASSEMBLY TO REMAIN
7 (E) GAS METER TO REMAIN, PROTECT IN PLACE
8 (E) THERMOSTATS TO BE RELOCATED
9 REMOVE ALL FLOOR FINISH FOR CLEAN CONCRETE SLAB
10 REMOVE ALL LOW WALL PARTITION
11 (E) INTERNATIONAL SYMBOL OF ACCESSIBILITY TO BE RELOCATED
12 (E) ELECTRICAL SWITCHGEAR TO REMAIN
13 (E) FIRE DEPT CONNECTION AND RISER TO ADJACENT BUILDING TO REMAIN
14 DEMO FURRED CHASE
15 REMOVE PORTION OF WALL, ADD CEILING TILE AND T-BAR GRID AS REQUIRED, PAINT TO MATCH EXISTING.
16 DASH LINE INDICATE (E) CEILING ABOVE TO BE REMOVED, REPAIR ADJACENT CEILING AS REQUIRED
17 DASH LINE INDICATE (E) AIR CLEANER ABOVE TO BE REMOVED, REPAIR ADJACENT CEILING AS REQUIRED
18 INFILL CONCRETE SLAB WHERE REMOVED REFER TO STRUCTURAL PROVIDE 90% COMPACTION AND VAPOR BARRIER UNDER NEW SLAB
19 DEPRESS SLAB 3/4" FOR NEW SHOWER STALL

KEY NOTES

X KEY NOTE
EXISTING DOOR TO BE REMOVED
EXISTING WINDOW TO BE REMOVED
EXISTING WALL TO BE REMOVED

SYMBOL LEGEND

1. REMOVE ALL ACOUSTIC TILE. (E) T-BAR GRID TO REMAIN.
2. REMOVE AIR CLEANER
3. REMOVE ALL LIGHT FIXTURES.
4. REMOVE ALL GYP. BOARD CEILINGS

CEILING DEMO NOTE

1. NOTIFY ARCHITECT OF ANY DISCREPANCIES BETWEEN ARCHITECTURAL AND ELECTRICAL OR MECHANICAL DRAWINGS AS WELL AS ANY DISCREPANCIES BETWEEN THE ARCHITECTURAL PLANS AND ANY EXISTING CONDITIONS. OBTAIN CLARIFICATION FROM ARCHITECT IN WRITING BEFORE PROCEEDING WITH THE WORK IN THE CORRESPONDING AREA.
2. CONTRACTOR TO COORDINATE DISCONNECT OF ALL UTILITIES PRIOR TO ANY DEMOLITION.
3. CONTRACTOR TO REMOVE ALL CONSTRUCTION DEBRIS AND DISPOSE OF IT IN ACCORDANCE WITH CITY AND COUNTY REGULATIONS.
4. CONTRACTOR TO PROTECT ALL PUBLIC BUILDING AREAS ALONG THE ROUTE OF TRAVEL PRIOR TO THE COMMENCEMENT OF DEMOLITION.
5. CONTRACTOR TO CLEAN UP PUBLIC AREAS ALONG THE ROUTE OF TRAVEL EACH DAY AND WHENEVER DEBRIS, DUST, ETC. BECOMES EXCESSIVE.
6. FIELD VERIFICATION OF EXISTING CONDITIONS AND SPECIFIC QUANTITIES OF DEMOLITION ARE THE RESPONSIBILITY OF THE CONTRACTOR.
7 ALL DIMENSIONS SHOWN TO BE EXISTING SHALL BE FIELD VERIFIED BY THE CONTRACTOR PRIOR TO DEMOLITION. VERIFY DEMOLITION WORK WITH NEW CONSTRUCTION AND INSTALLATION DRAWINGS PRIOR TO COMMENCEMENT OF CONSTRUCTION.
8. CONTRACTOR SHALL PROVIDE ALL TEMPORARY BRACING AS REQUIRED TO MAINTAIN STRUCTURAL STABILITY OF THE EXISTING STRUCTURE DURING ALL PHASES OF CONSTRUCTION.
9. IF THE CONTRACTOR ENCOUNTERS ANY HAZARDOUS MATERIALS DURING DEMOLITION OR CONSTRUCTION, CONSTRUCTION TO BE SUSPENDED IMMEDIATELY AND MCDONALD'S PROJECT MANAGER SHALL BE NOTIFIED BEFORE PROCEEDING.
10. ALL DEMOLITION SHALL BE CARRIED OUT IN A SAFE MANNER IN ACCORDANCE WITH OSHA REGULATIONS.

GENERAL DEMO NOTES

DESIGN ENGINEER'S SEAL & SIGNATURE:

LICENSED ARCHITECT
GARY T. HIPOLITE
No. C13681
January 31, 2017
STATE OF CALIFORNIA

PREPARED UNDER THE SUPERVISION OF:

designua
PLANNING AND DESIGN
12832 Valley View Street | Suite C | Garden Grove | CA | 92845
Phone 714.892-3900 | Fax 714.892-3944

DEMO FLOOR PLAN

SCALE: 1/4"=1'-0"

Underground Service Alert
Call: TOLL FREE
1(800) 422-4133
TWO WORKING DAYS BEFORE YOU DIG

REVISIONS

NO.	DESCRIPTION	DATE
PC1	PLAN CHECK CORRECTION	03/30/15
	BID SET	04/10/15

REFERENCES

APPROVED BY:

CITY ENGINEER RCE: DATE:

DATE:	03/09/15
SCALE (H):	
SCALE (V):	
DRAWN BY:	D.L.
CHECKED BY:	G.H.

SHEET TITLE: DEMO FLOOR PLAN

PROJECT NAME AND ADDRESS:
5414 LA PALMA AVE., LA PALMA, CA

CITY PROJECT NO.

SHEET NO. D1.0
DEMO FLOOR PLAN

SHEET OF

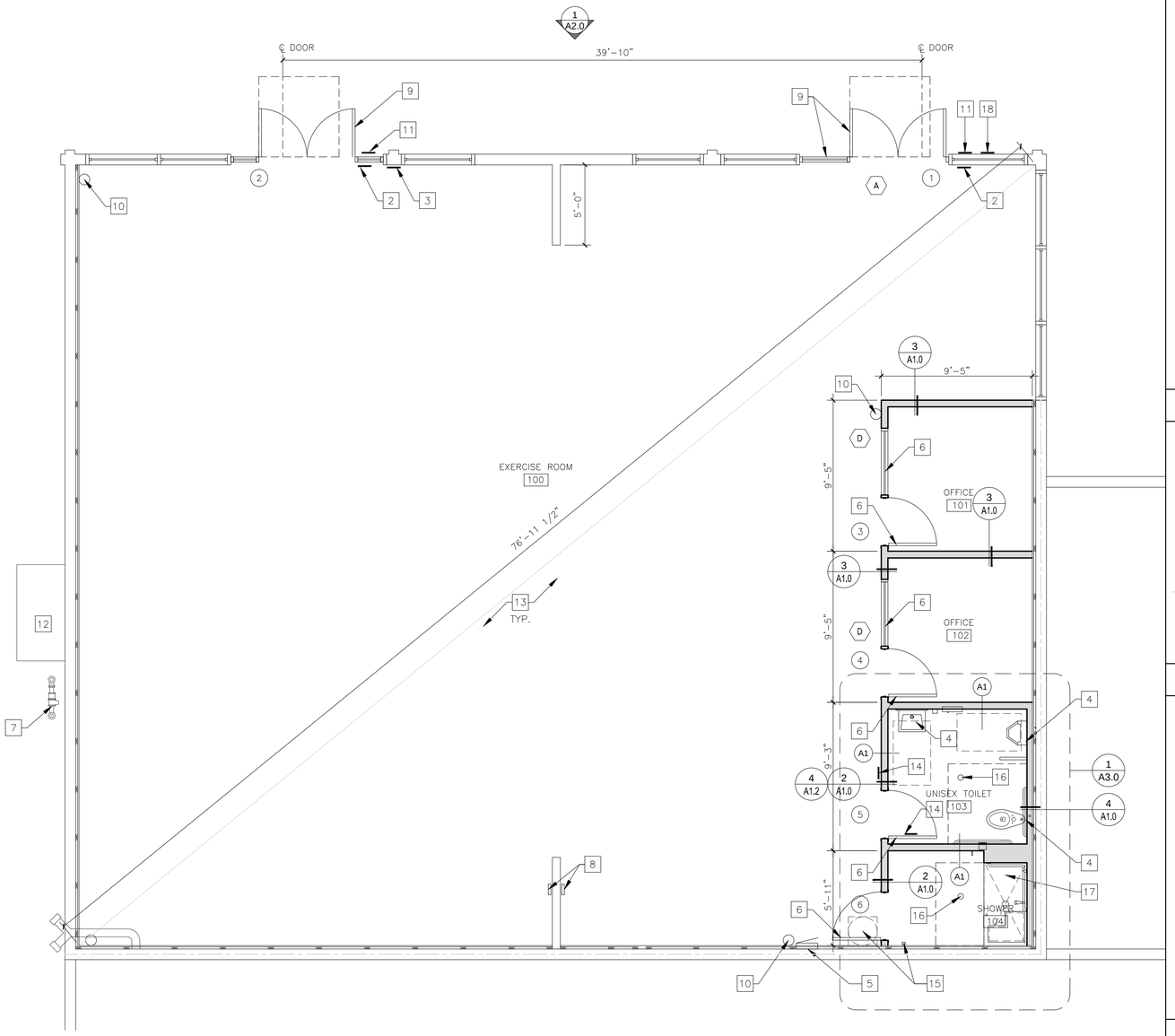

1	NOT USED
2	LOCATION OF TACTILE EXIT SIGN, RE. DETAIL 1/A4.0
3	LOCATION OF OCCUPANCY LOAD SIGN
4	(N) PLUMBING FIXTURES
5	RELOCATED ELECTRICAL PANEL
6	(N) INTERIOR DOOR/WINDOW ASSEMBLY
7	(E) GAS METER
8	RELOCATED THERMOSTATS
9	NEW EXTERIOR DOOR AND/ OR WINDOW TO
10	(N) FIRE EXTINGUISHER
11	RELOCATED OR NEW INTERNATIONAL SYMBOL OF ACCESSIBILITY
12	(E) ELECTRICAL SWITCHGEAR TO REMAIN
13	PATCH AND REPAIR CONC. SLAB. PROVIDE SEALER
14	ACCESSIBILITY SIGNAGE, RE. CV1.1
15	(N) WATER HEATER ABOVE THE CEILING ON WALL MOUNTED SHELF, RE. ELECTRICAL AND STRUCTURAL DRAWING FOR MORE DETAIL. PROVIDE OVERFLOW DRAIN AND PIPE DOWN WALL STUB OUT ABOVE FLOOR IN SHOWER ROOM
16	(N) FLOOR DRAIN, REFER DETAIL 8/A3.0
17	CHIP THE EXISTING SLAB DOWN AT SHOWER
18	(N) "NO SMOKING" SIGN

KEY NOTES

- (A) — PARTITION TYPE TAG SEE 2/A1.0
- (7) — DOOR TAG – SEE DOOR SCHEDULE ON A4.0
- (A) — WINDOW TYPE – SEE WINDOW SCHEDULE ON A4.0
- EXISTING WALL TO REMAIN
- NEW INTERIOR WALL
- EXISTING FIRE WALL/ FIRE BARRIER MIN. 3–HR RATED CMU WALL EXTENDING MIN. 30" ABOVE HIGHTEST ROOF UL#: U904

SYMBOL LEGEND

1. EXTERIOR DIMENSIONS ARE TO COLUMN REFERENCE LINES AND EXTERIOR FACE OF FINISH UNLESS OTHERWISE NOTED. INTERIOR DIMENSIONS ARE TO FACE OF FINISH.
2. SEE SHEET A4.0 FOR DOOR AND ROOM FINISH SCHEDULES
3. SEE SITE PLAN FOR SIDEWALKS, RAMPS, ETC.
4. GC TO PROVIDE ACCESSIBLE SIGNAGE PACKAGE AND INSTALL SIGNS AT LOCATIONS AND POSITIONS INDICATED IN PACKAGE OR AS REQUIRED BY LOCAL CODES.
5. MAXIMUM OCCUPANCY SIGN TO BE POSTED PER LOCAL CODE. SIGN FURNISHED AND INSTALLED BY GENERAL CONTRACTOR.
6. GC TO COORDINATE ALL REQUIRED BLOCKING FOR WALL HUNG EQUIPMENT, SHELVES, ETC. FOR PROPER INSTALLATION HEIGHTS.

GENERAL NOTES

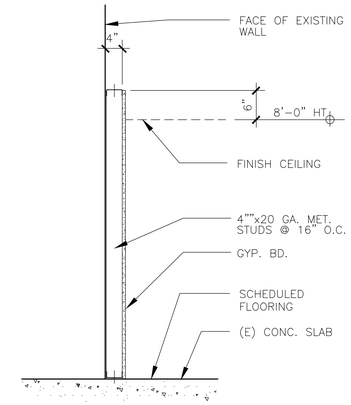

METAL STUD FURRING WALL — SCALE: 3/16"=1'-0" — 4

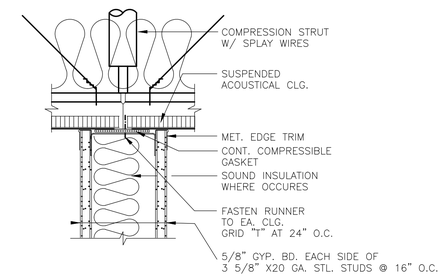

GYP.BD.PARTITION TO SUSPENDED CLG. — SCALE: 3"=1'-0" — 3

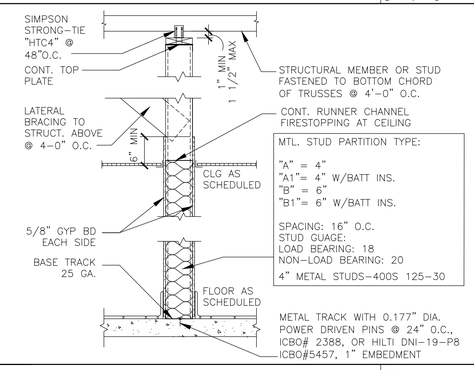

INTERIOR PARTITION — SCALE: 3/4"=1'-0" — 2

FLOOR PLAN — SCALE: 1/4"=1'-0" — 1

DESIGN ENGINEER'S SEAL & SIGNATURE:

LICENSED ARCHITECT
GARY T. HIPOLITE
No. C13681
January 31, 2017
STATE OF CALIFORNIA

PREPARED UNDER THE SUPERVISION OF:

designun
PLANNING AND DESIGN
12832 Valley View Street | Suite C | Garden Grove | CA | 92845
Phone 714.892-3900 | Fax 714.892-3944

Underground Service Alert
Call: TOLL FREE
1(800) 422-4133
TWO WORKING DAYS BEFORE YOU DIG

REVISIONS

NO.	DESCRIPTION	DATE
PC1	PLAN CHECK CORRECTION	03/30/15
	BID SET	04/10/15

REFERENCES

APPROVED BY:

CITY ENGINEER RCE: DATE:

DATE:	03/09/15
SCALE (H):	
SCALE (V):	
DRAWN BY:	D.L.
CHECKED BY:	G.H.

SHEET TITLE: FLOOR PLAN

PROJECT NAME AND ADDRESS:

5414 LA PALMA AVE., LA PALMA, CA

CITY PROJECT NO.

SHEET NO. A1.0 COVER SHEET

SHEET OF

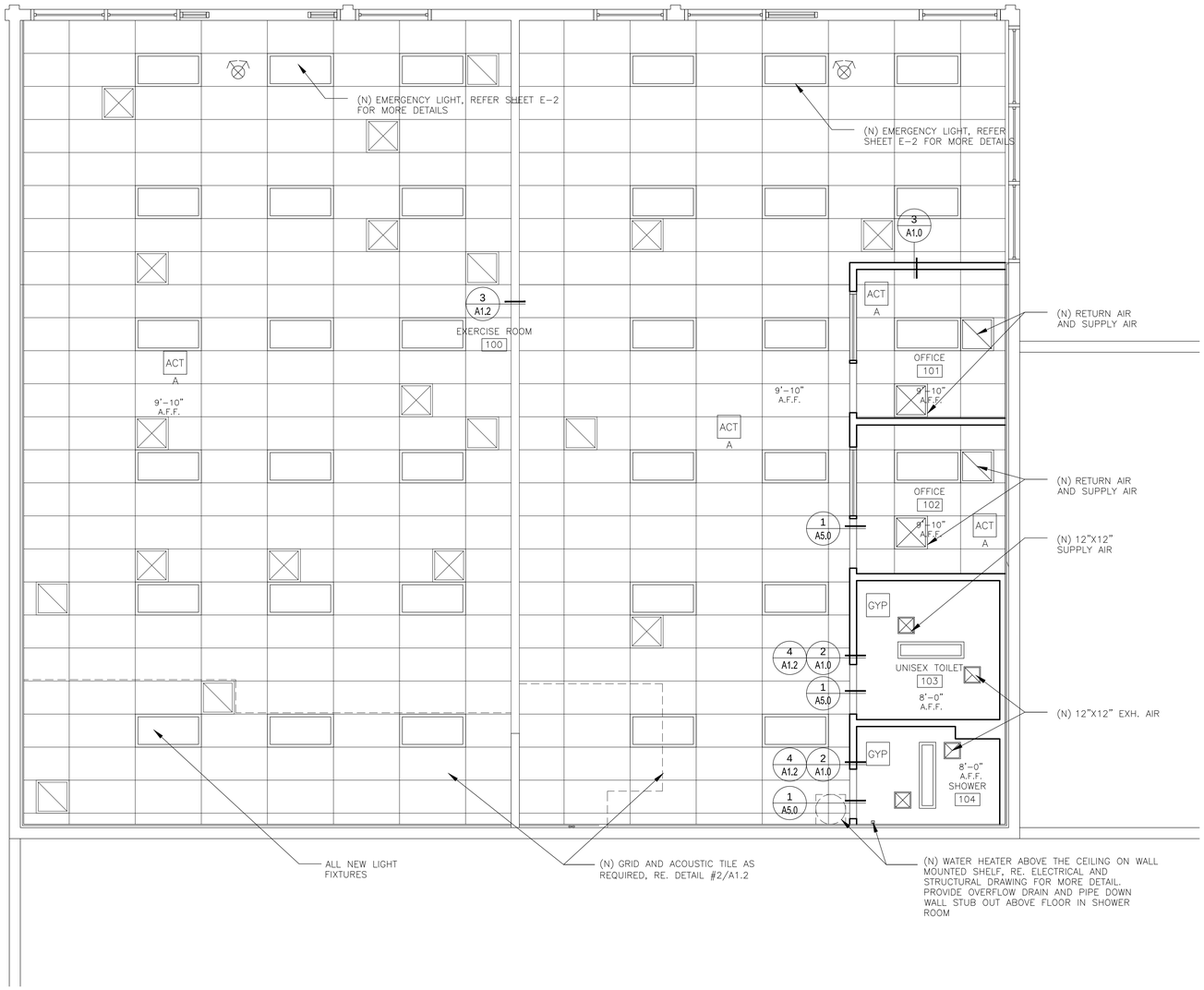

REFLECTED CEILING PLAN | SCALE: 1/4"=1'-0" | 1

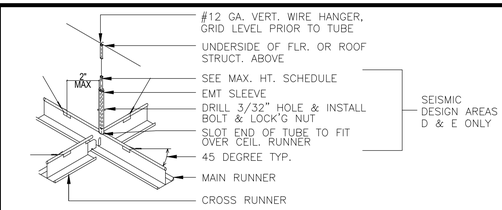

VERTICAL COMPRESSION STRUT

ELECTRICAL METALLIC TUBING (EMT)

SIZE (DIAMETER)	(MAX. HEIGHT)
1/2"	4'-0"
3/4"	5'-2"
1"	6'-6"
1 1/4"	8'-6"
1 1/2"	9'-10"
2"	12'-7"
2 1/2"	16'-6"
3"	20'-2"
4"	26'-0"

LATERAL FORCE BRACING: INSTALL BOLT TO SECURE ONE TUBE TO THE OTHER. TUBES SHALL LAP TO ONE ANOTHER AT LEAST 4" IN FULLY EXTENDED POSITION

COMPRESSION STRUT W/ LATERAL BRACING @ 12'-0" MAX. EA. DIRECTION & 4'-0" MAX. FROM PERIMETER WALLS

FOR SEISMIC DESIGN CATEGORY D & E:

1. GRID SYSTEM TO BE HEAVY DUTY T-BAR.
2. IN EACH ORTHOGONAL HORIZONTAL DIRECTION, ONE END OF THE CEILING GRID SHALL BE ATTACHED TO THE CLOSING ANGLE. THE OTHER END SHALL HAVE A 0.75" CLEARANCE FROM THE WALL.

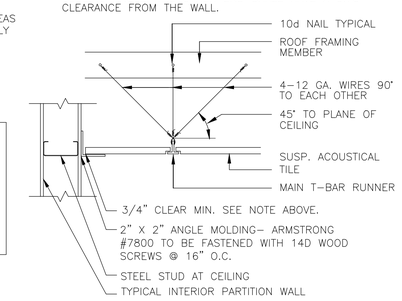

REINFORCED SUSPENDED CEILING | SCALE: 1/2"=1'-0" | 2

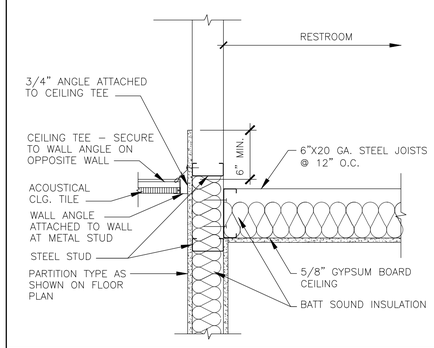

GYP. BD. CLG DETAIL | SCALE: 1/2"=1'-0" | 4

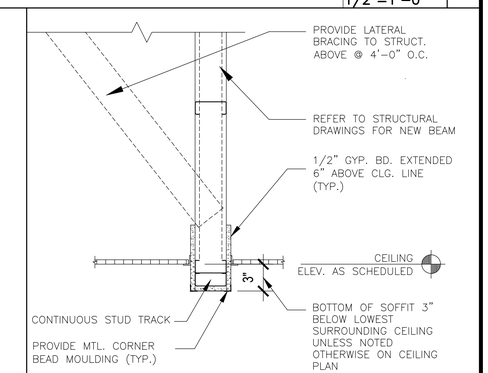

CEILING TRANSITION W/ SOFFIT | SCALE: 1 1/2"=1'-0" | 3

(N) 2X4 ENERGY EFFICIENT LIGHT FIXTURE SEE ELEC.

(E) MECHANICAL REGISTER/DIFFUSER. U.O.N.

(N) EXIT SIGN, SEE ELEC.

SYMBOL LEGEND

ACT A — (N) 24"X48" TEGULAR EDGE ACOUSTICAL CEILING TILE IN EXISTING GRID, REPLACE OR ADD GRID AS REQUIRED USG OLYMPIA MICRO CLIMAPLUS SLT # 4753

GYP — (N) GYPSUM BOARD CEILING

KEY NOTES

1. GENERAL CONTRACTOR SHALL COORDINATE HVAC DIFFUSER LOCATION WITH MECHANICAL PLANS AND REPORT ANY DISCREPANCIES TO ARCHITECT.
2. REFERENCE MECHANICAL AND ELECTRICAL DRAWINGS FOR DIFFUSER AND LIGHTING INFORMATION.

GENERAL NOTES

DESIGN ENGINEER'S SEAL & SIGNATURE:

LICENSED ARCHITECT
GARY T. HIPOLITE
No. C13681
January 31, 2017
STATE OF CALIFORNIA

PREPARED UNDER THE SUPERVISION OF:

designua
PLANNING AND DESIGN
12832 Valley View Street | Suite C | Garden Grove | CA | 92845
Phone 714.892-3900 | Fax 714.892-3944

Underground Service Alert
Call: TOLL FREE
1(800) 422-4133
TWO WORKING DAYS BEFORE YOU DIG

REVISIONS

NO.	DESCRIPTION	DATE
PC1	PLAN CHECK CORRECTION	03/30/15
	BID SET	04/10/15

REFERENCES

APPROVED BY:

CITY ENGINEER RCE: DATE:

DATE:	03/09/15
SCALE (H):	
SCALE (V):	
DRAWN BY:	D.L.
CHECKED BY:	G.H.

SHEET TITLE: REFLECTED CEILING PLAN

PROJECT NAME AND ADDRESS: 5414 LA PALMA AVE., LA PALMA, CA

CITY PROJECT NO.

SHEET NO. A1.2 CEILING PLAN

SHEET OF

KEY NOTE

- CB (E) CONCRETE BLOCK TO REMAIN
- D REMOVE EXISTING DOOR/OR WINDOW
- P (E) PIPE BOLLARD – PAINTED YELLOW
- WE (E) EXTERIOR DOOR/WINDOW ASSEMBLY TO REMAIN

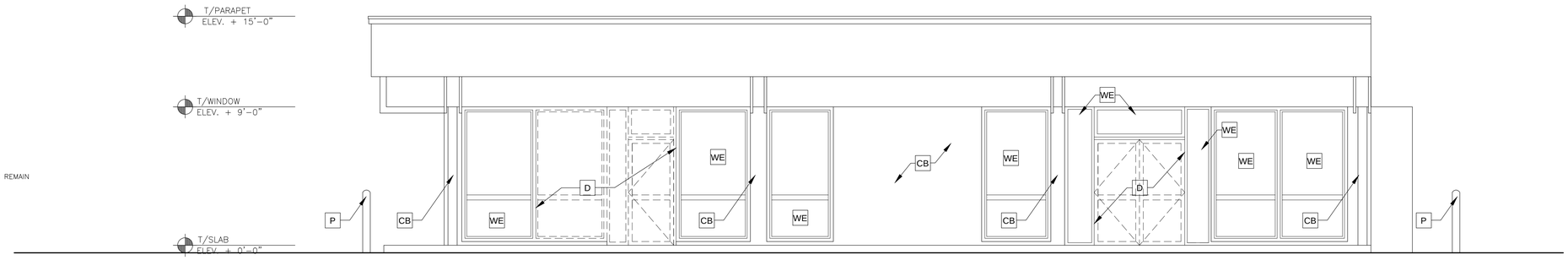

DEMO ELEVATION

SCALE: 1/4"=1'-0"

2

KEY NOTE

- AS ACCESSIBILITY SIGNAGE
- BA BUILDING ADDRESS 6" HIGH WHITE VINYL LETTERS ON INTERIOR SIDE OF GLASS TRANSOM
- CB (E) CONCRETE BLOCK TO REMAIN
- P (E) PIPE BOLLARD – PAINTED YELLOW
- W1 (N) EXTERIOR DOOR/WINDOW ASSEMBLY – TEMPERED GLASS
- WE (E) EXTERIOR DOOR/WINDOW ASSEMBLY TO REMAIN

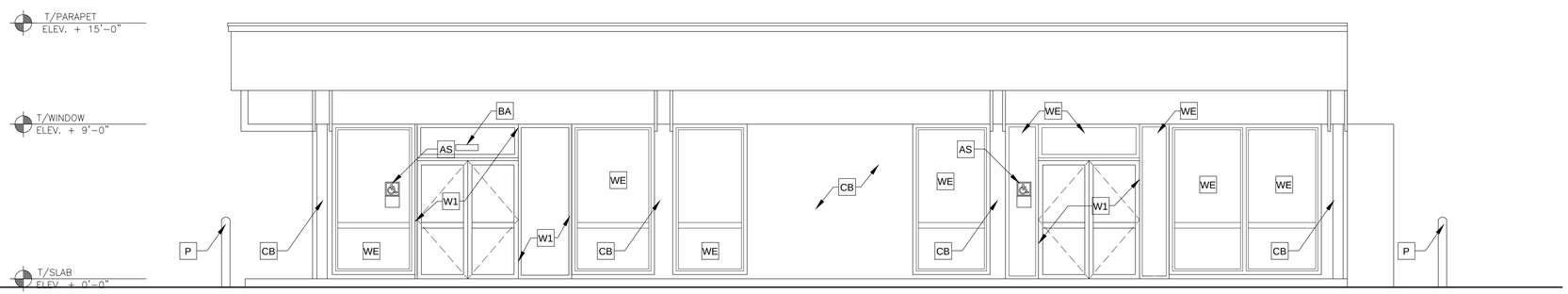

PROPOSED ELEVATION

SCALE: 1/4"=1'-0"

1

DESIGN ENGINEER'S SEAL & SIGNATURE:

LICENSED ARCHITECT
GARY T. HIPOLITE
No. C13681
January 31, 2017
STATE OF CALIFORNIA

PREPARED UNDER THE SUPERVISION OF:

designun
PLANNING AND DESIGN
12832 Valley View Street | Suite C | Garden Grove | CA | 92845
Phone 714.892-3900 | Fax 714.892-3944

Underground Service Alert
Call: TOLL FREE
1(800) 422-4133
TWO WORKING DAYS BEFORE YOU DIG

REVISIONS

NO.	DESCRIPTION	DATE
PC1	PLAN CHECK CORRECTION	03/30/15
	BID SET	04/10/15

REFERENCES

APPROVED BY:

CITY ENGINEER RCE: DATE:

DATE:	03/09/15
SCALE (H):	
SCALE (V):	
DRAWN BY:	D.L.
CHECKED BY:	G.H.

SHEET TITLE: ELEVATIONS

PROJECT NAME AND ADDRESS:

5414 LA PALMA AVE., LA PALMA, CA

CITY PROJECT NO.

SHEET NO. A2.0 ELEVATIONS

SHEET OF

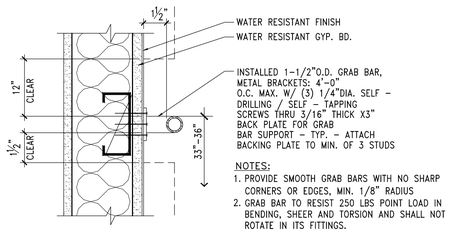

TYP. GRAB BAR DETAIL | SCALE: 3"=1'-0" | 9

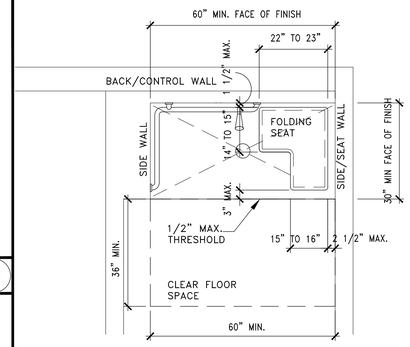

60" MINIMUM X 30" MINIMUM ROLL-IN SHOWER

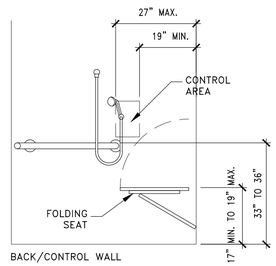

ELEVATION-60" MINIMUM X 30" MINIMUM ROLL-IN SHOWER

SHOWER STALL | SCALE: 1/2"=1'-0" | 2

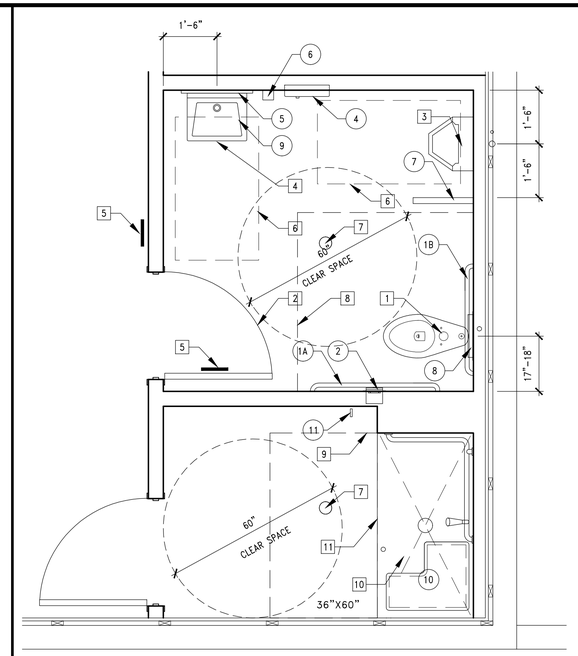

ENLARGED RESTROOM/SHOWER ROOM | SCALE: 1/2"=1'-0" | 1

NOTES RESTROOM

1. ALL DIMENSIONS SHOWN ARE TAKEN TO FINISH HOLD & CLEAR DIMENSIONS TO FACE OF FINISH AT BASE (EXCEPT TOILET 17" TO 18" TO CENTERLINE WHICH IS TO WALL)
2. NOT USED
3. SEE SHEET A4.0 FOR DOOR AND FINISH SCHEDULES.
4. SEE 3/- FOR FIXTURE MOUNTING HEIGHTS

RESTROOM/SHOWER KEYNOTES

1. (N) TOILET TO MEET CODE REQUIREMENTS
2. (N) DOOR, SEE DOOR SCHEDULE ON SHEET A4.0
3. (N) FLOOR MOUNTED URINAL
4. (N) WALL MOUNTED SINK, PROVIDE INSULATION AT PIPES
5. SIGNAGE SEE CV1.1 SIGNS PICTOGRAMS
6. 30"X48"CLEAR SPACE
7. (N) FLOOR DRAIN, REFER DETAIL 8/A3.0
8. 59"X66" CLEAR SPACE
9. 36"X60" CLEAR SPACE
10. DEPRESS SLAB 3/4" AT SHOWER STALL
11. 1/2" HIGH MAX. THRESHOLD WITH 1:2 LEVEL INTEGRAL WITH PRE-FAB SHOWER STALL

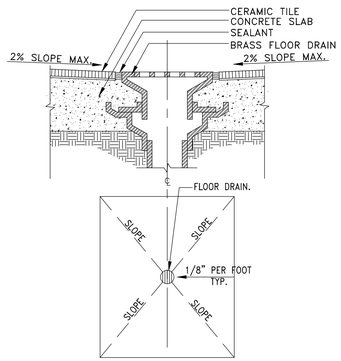

FLOOR DRAIN DETAIL | SCALE: 3/4"=1'-0" | 8

	ITEM	MODEL #		NOTES
1A	NEW GRAB BAR 42"	BRADLEY 812-001-42		BACKING PLATE MOUNTED BACKING
1B	NEW GRAB BAR 36"	812-001-36		SEE 3/A3.0 FOR MOUNTING HEIGHT
2	NEW TOILET TISSUE DISPENSER, DOUBLE, RECESSED	BRADLEY 5412		FRAME WALL OPENING PER MANUF. RECOMMENDATIONS SEE 3/A3.0 FOR MOUNTING HEIGHT
4	PAPER TOWER DISPENSER/ RECEPT.	BRADLEY 8115		FRAME WALL OPENING PER MANUF. RECOMMENDATIONS SEE 3/A3.0 FOR MOUNTING HEIGHT
5	NEW MIRROR, CHANNEL FRAME	BRADLEY #781 24"x36"		SEE 3/A3.0 FOR MOUNTING HEIGHT
6	NEW SOAP DISPENSER, WALL-MOUNTED	BRADLEY 6542		SEE 3/A4.0 FOR MOUNTING HEIGHT
7	NEW S.S. URINAL SCREEN	BRADLEY MODEL #5 18"		WALL MOUNTED STAINLESS STEEL FINISH
8	NEW TOILET SEAT COVER DISPENSER, RECESSED	BRADLEY 584		FRAME WALL OPENING PER MANUF. RECOMMENDATIONS SEE 3/A3.0 FOR MOUNTING HEIGHT
9	WALL MOUNT BATHROOM SINK	KOHLER K-1728		SEE 3/A3.0 FOR MOUNTING HEIGHT
10	PRE-FAB SHOWER STALL 60"X30"	AQUATIC 1623BFSTD		COLOR: WHITE PROVIDE WITH OPTIONAL: -S.S. L-SHAPED GRAB BAR -PHENOLIC WHITE -L-SHAPED FOLD-UP SEAT -HAND-HELD SHOWER ASSEMBLY AND MIXING VALVE -SOAP DISH -CURTAIN AND CURTAIN ROD
11	COAT HOOK			MOUNT AT +40" AFF.

NOTES:
CUT BACK-UP SUPPORTS BETWEEN STUDS SO FACE OF SUPPORT IS FLUSH W/WALL STUD
X RESTROOM ACCESSORY

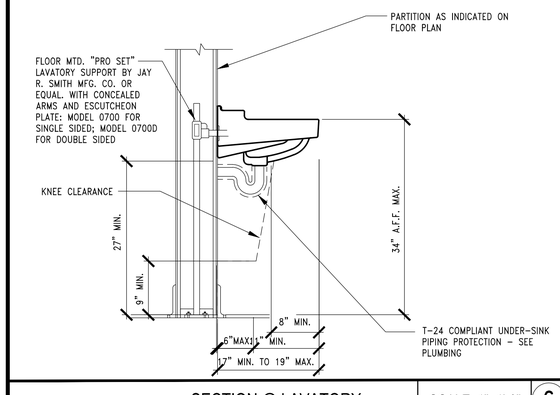

SECTION @ LAVATORY | SCALE: 1"=1'-0" | 6

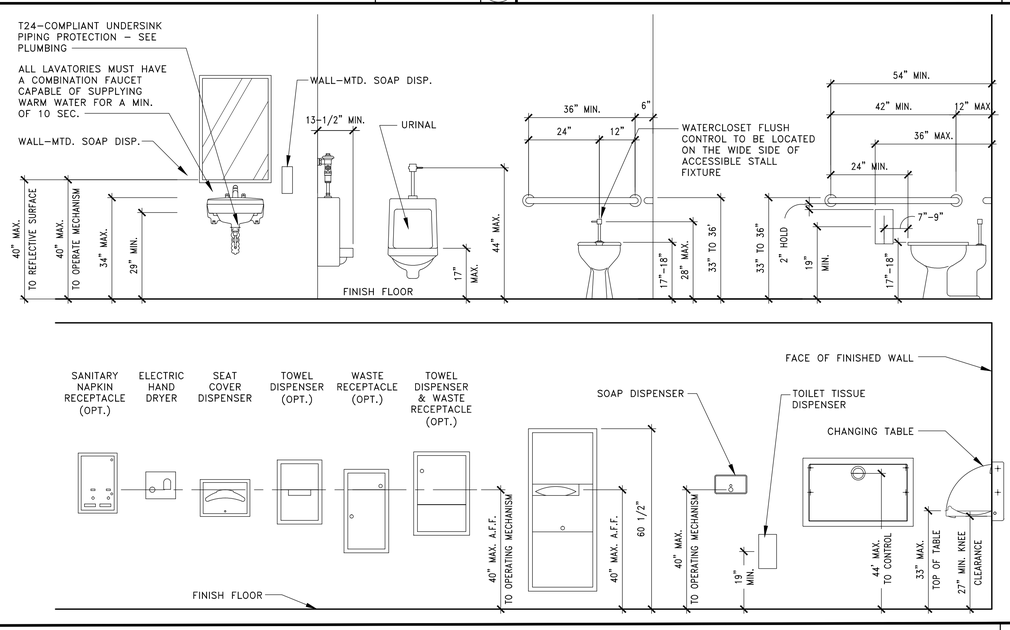

(TYP. RESTROOM FIXTURE AND ACCESSORY ELEVATIONS | SCALE: 1/2"=1'-0" | 3

DESIGN ENGINEER'S SEAL & SIGNATURE:

LICENSED ARCHITECT
GARY T. HIPOLITE
No. C13681
January 31, 2017
STATE OF CALIFORNIA

PREPARED UNDER THE SUPERVISION OF:

designua
PLANNING AND DESIGN
12832 Valley View Street | Suite C | Garden Grove | CA | 92845
Phone 714.892-3900 | Fax 714.892-3944

Underground Service Alert
Call: TOLL FREE
1(800) 422-4133
TWO WORKING DAYS BEFORE YOU DIG

REVISIONS

NO.	DESCRIPTION	DATE
PC1	PLAN CHECK CORRECTION	03/30/15
	BID SET	04/10/15

REFERENCES

APPROVED BY:
CITY ENGINEER RCE: DATE:

DATE:	03/09/15
SCALE (H):	
SCALE (V):	
DRAWN BY:	D.L.
CHECKED BY:	G.H.

SHEET TITLE: RESTROOM ACCESSORY SCHEDULE

PROJECT NAME AND ADDRESS:
5414 LA PALMA AVE., LA PALMA, CA

CITY PROJECT NO.

SHEET NO. A3.0
ENLARGED R.R PLAN
SHEET OF

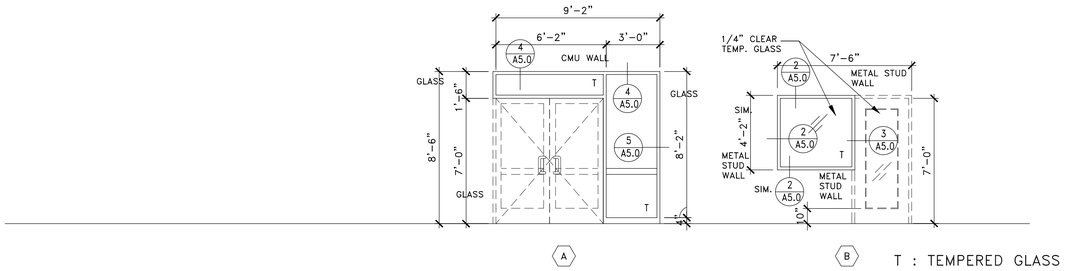

T : TEMPERED GLASS

WINDOW TYPES

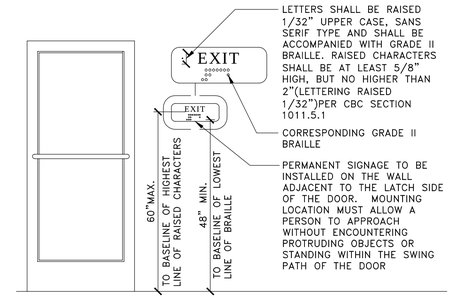

TACTILE EXIT SIGN

SCALE: NTS

1

GENERAL NOTES:

1. ALL EXIT DOORS SHALL BE KEYLESS IN THE DIRECTION OF EGRESS.
2. THE OPENING FORCE OF ALL EXT. PUSH/PULL DOORS SHALL NOT EXCEED 5 LBS.
3. THE OPENING FORCE OF ALL INTERIOR PUSH/PULL DOORS SHALL NOT EXCEED 5 LBS.
4. PROVIDE PANIC HARDWARE FOR ALL EXTERIOR DOORS AS NOTED ON THE DOOR HARDWARE SCHEDULE.
5. ALL DOOR HARDWARE SHALL NOT REQUIRE TIGHT GRASPING, TIGHT PINCHING OR TWISTING OF THE WRIST TO OPERATE.

DOOR #1 & 2

1. CLOSERS: LCN 4021 x 18
2. HINGES: OFFSET PIVOT; ANSI-A-156.4; GRADE 1; EXPOSED PARTS OF CAST ALUMINUM ALLOY, AS SUPPLIED BY DOOR MANUFACTURER.
3. PUSH/PULL HANDLES: KAWNEER #CO-9 OR HAGER PUSH/PULL SET 164D/V/B.
4. PANIC HARDWARE: ADAMS RITE MFG. CO. 8600 SERIES WITH OUTSIDE CYLINDER (FINISH TO MATCH STOREFRONT DOOR)
5. THRESHOLD: NATIONAL GUARD PRODUCTS, INC. SADDLE TYPE THRESHOLD 325, 72" WIDE x 1/2" RISE (ADA ACCESSIBLE) WITH DUSTPROOF STRIKES
6. WEATHER STRIPPING: PROVIDE COMPRESSION WEATHER STRIPPING AGAINST FIXED STOPS. AT OTHER EDGES PROVIDE SLIDING WEATHER STRIPPING RETAINED IN ADJUSTABLE STRIP MORTISED INTO DOOR EDGE. PROVIDE EPDM OR VINYL GASKET WEATHER STRIPPING IN BOTTOM DOOR RAIL ADJUSTABLE FOR CONTACT W/ THRESHOLD.
7. SIGN: MOUNT OVER EXIT DOORS, TO READ "THIS DOOR MUST REMAIN UNLOCKED WHENEVER THE BUILDING IS OCCUPIED DURING BUSINESS HOURS".

DOOR #3 & 4

1. HINGES: HAGER ROTON 780-112HD, ALUMINUM CLEAR ANODIZED FINISH
2. LOCKSET: SCHLAGE ND50PD SPA 626 FINISH
3. DOOR SILENCERS: HAGER, QUANTITY: =3.
4. DOOR STOP: HAGER 236W 32D.

DOOR #5

1. CLOSER: LCN LDPA4031 SNB ALUM. PULL SIDE MOUNTED FOR IN-SWINGING DOORS
2. HINGES: HAGER ROTON 780-112HD, ALUMINUM CLEAR ANODIZED FINISH.
3. LOCKSET: SCHLAGE ND40S SPA 626 FINISH
4. DOOR SILENCERS: HAGER, QUANTITY = 3.
5. DOOR STOP: HAGER 236W 32D
6. KICK PLATES: HAGER 190S US28D SATIN, ALUM. 8" x 34" x 18 GA. (2) PER DOOR
7. SAFETY GUARDS: FINGER SAFE MKIA PUSH SIDE BRN.
   FINGER SAFE MKIB PULL SIDE BRN.
8. UNDERCUT DOOR BY 3/4"

DOOR #6

1. HINGES: HAGER ROTON 780-112HD, ALUMINUM CLEAR ANODIZED FINISH.
2. LOCKSET: SCHLAGE ND40S SPA 626 FINISH
3. DOOR SILENCERS: HAGER, QUANTITY = 3.
4. DOOR STOP: HAGER 252F 32D
5. SAFETY GUARDS: FINGER SAFE MKIA PUSH SIDE BRN.
   FINGER SAFE MKIB PULL SIDE BRN.
6. UNDERCUT DOOR BY 3/4"

DOOR HARDWARE

DOOR NOTES:

1. ALL DOORS SHALL COMPLY WITH SECTION 1008 & CH. 11B OF THE CBC
2. VERIFY THAT ALL DOORS AND HARDWARE MEET THE REQUIREMENTS OF ALL GOVERNING CODES AND STANDARDS. NOTIFY THE ARCHITECT IMMEDIATELY OF ANY DISCREPANCIES PRIOR TO CONSTRUCTION.
3. FIELD MEASURE, AS REQUIRED, ALL DOOR OPENINGS PRIOR TO FABRICATION.
4. A FLOOR OR LANDING NOT MORE THAN 1/4" BELOW THE THRESHOLD IS REQUIRED ON EACH SIDE OF AN EXIT DOOR.
5. EXIT DOORS SHALL BE OPERABLE FROM THE INSIDE WITHOUT THE USE OF A KEY OR ANY SPECIFIC KNOWLEDGE.
6. EXTERIOR DOORS SHALL HAVE WEATHERSTRIPPING AT THE HEAD, JAMB AND SILL AND A THRESHOLD AT THE SILL.
7. ALLOW 2" FROM EDGE OF DOOR FRAME TO FINISH OF ADJACENT WALL FOR HARDWARE CLEARANCES. DOORS SHALL SWING TO A FULL OPEN POSITION, THE OPENING FORCE FOR INTERIOR SIDE SWING DOORS WITHOUT CLOSERS SHALL NOT EXCEED 5 POUNDS PER CBC 1008.1.3. & CH. 11B DOORS SHALL ALSO MEET ACCESSIBILITY REQUIREMENTS OF CBC CH. 11B.
8. ALL DOOR HARDWARE SHALL BE LEVER TYPE, PUSH/PULL TYPE OR PANIC TYPE.
9. MAXIMUM EFFORT TO OPERATE DOORS SHALL NOT EXCEED 5 LBS PER CODE
10. OPENING HARDWARE IS TO BE CENTERED BETWEEN 34" AND 44" ABOVE FINISH FLOOR
11. DOORWAYS SHALL HAVE A MINIMUM CLEAR OPENING OF 32" WITH DOOR OPEN 90 DEGREES U.N.O.
12. ALL EXIT DOORS SHALL BE KEYLESS IN THE DIRECTION OF EGRESS.
13. NOT USED
14. PROVIDE PANIC HARDWARE FOR ALL EXTERIOR DOORS AS NOTED ON THE DOOR SCHEDULE.
15. ALL DOOR HARDWARE SHALL NOT REQUIRE TIGHT GRASPING, TIGHT PINCHING OR TWISTING OF THE WRIST TO OPERATE.
16. FOR HINGED DOORS, THE OPENING WIDTH SHALL BE MEASURED WITH THE DOOR POSITIONED AT AN ANGLE OF 90 DEGREES FROM ITS CLOSED POSITION.
17. LATCHING AND LOCKING DOORS THAT ARE HAND ACTIVATED AND WHICH ARE IN A PATH OF TRAVEL SHALL BE OPERABLE BY LEVER-TYPE HARDWARE, PANIC BARS, PUSH-PULL ACTIVATING BARS, U-SHAPED HANDLES, OR OTHER HARDWARE DESIGNED TO PROVIDE PASSAGE WITHOUT REQUIRING THE ABILITY TO GRASP THE OPENING HARDWARE.
18. NOT USED
19. WHERE A PAIR OF DOORS IS UTILIZED, AT LEAST ONE OF THE DOORS SHALL PROVIDE A CLEAR, UNOBSTRUCTED OPENING WIDTH OF 32 INCHES WITH THE LEAF POSITIONED AT AN ANGLE OF 90 DEGREES FROM ITS CLOSED POSITION.
20. THERE SHALL BE A LEVEL AND CLEAR FLOOR OR LANDING ON EACH SIDE OF A DOOR. THE LEVEL AREA SHALL HAVE A LENGTH IN THE DIRECTION OF DOOR SWING OF AT LEAST 60 INCHES AND THE LENGTH OPPOSITE THE DIRECTION OF DOOR SWING OF 48 INCHES AS MEASURED AT RIGHT ANGLES TO THE PLANE OF THE DOOR IN THE CLOSED POSITION.
21. THE WIDTH OF THE LEVEL AREA ON THE SIDE TO WHICH THE DOOR SWINGS SHALL EXTEND 24 INCHES PAST THE STRIKE EDGE OF THE DOOR FOR EXTERIOR DOORS AND 18 INCHES PAST THE STRIKE EDGE FOR INTERIOR DOORS. WHERE THE PLANE OF THE DOORWAY IS OFFSET OR LOCATED IN AN ALCOVE A DISTANCE MORE THAN 8 INCHES MEASURED FROM THE PLANE OF THE DOORWAY TO THE FACE OF THE WALL, THE DOOR SHALL BE PROVIDED WITH 60 INCHES MANEUVERING CLEARANCE FOR FRONT APPROACH.
22. PROVIDE CLEAR SPACE OF 12 INCHES PAST STRIKE EDGE OF THE DOOR ON THE OPPOSITE SIDE TO WHICH THE DOOR SWINGS IF THE DOOR IS EQUIPPED WITH BOTH A LATCH AND A CLOSER.
23. THE BOTTOM 10 INCHES OF ALL DOORS EXCEPT AUTOMATIC AND SLIDING DOORS SHALL HAVE A SMOOTH, UNINTERRUPTED SURFACE TO ALLOW THE DOOR TO BE OPENED BY A WHEELCHAIR FOOTREST WITHOUT CREATING A TRAP OR HAZARDOUS CONDITION. WHERE NARROW FRAME DOORS ARE USED, A 10 INCH HIGH SMOOTH PANEL SHALL BE INSTALLED ON THE PUSH SIDE OF THE DOOR, WHICH WILL ALLOW THE DOOR TO BE OPENED BY A WHEELCHAIR FOOTREST WITHOUT CREATING A TRAP OR HAZARDOUS CONDITION.
24. THE MAXIMUM FORCE REQUIRED TO PUSH OR PULL OPEN A DOOR SHALL COMPLY WITH THE FOLLOWING. PUSH OR PULL FORCE FOR A HINGED DOOR SHALL BE MEASURED PERPENDICULAR TO THE DOOR FACE AT THE DOOR OPENING HARDWARE OR 30 INCHES FROM THE HINGED SIDE, WHICHEVER IS FARTHER FROM THE HINGE. PUSH OR PULL FORCE FOR A SLIDING OR FOLDING DOOR SHALL BE MEASURED PARALLEL TO THE DOOR AT THE DOOR PULL OR LATCH. COMPENSATING DEVISES OR AUTOMATIC DOOR OPERATORS COMPLYING WITH CH. 11B MAY BE USED TO MEET THE MAXIMUM FORCE LIMITS.
25. WHEN THE DOOR HAS A CLOSER, THEN THE SWEEP PERIOD OF THE CLOSER SHALL BE ADJUSTED SO THAT FROM AN OPEN POSITION OF 70 DEGREES, THE DOOR WILL TAKE AT LEAST 3 SECONDS TO MOVE TO A POINT 3 INCHES FROM THE LATCH, MEASURED TO THE LEADING EDGE OF THE DOOR.

DOOR NOTES

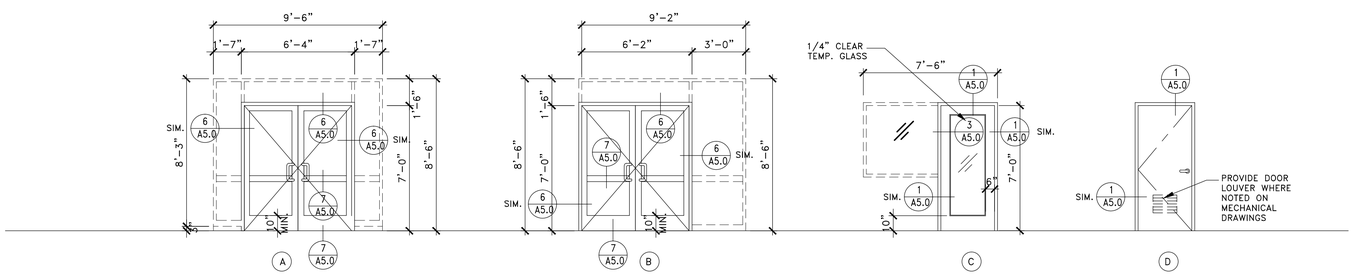

DOOR TYPES

DOOR #	DOOR MATERIAL	DOOR SIZE	DOOR TYPE	FRAME MATERIAL	NOTE PH = PANIC HARDWARE
1	ALUMINUM	3'-0" (PAIR) x7'-0"x1 3/4"	B	ALUMINUM	CLEAR ANODIZED, PH
2	ALUMINUM	3'-0" (PAIR) x7'-0"x1 3/4"	A	ALUMINUM	CLEAR ANODIZED, PH
3	SOLID CORE WOOD	3'-0"x7'-0"x1 3/4"	C	KNOCK-DOWN STEEL	PAINT GRADE
4	SOLID CORE WOOD	3'-0"x7'-0"x1 3/4"	C	KNOCK-DOWN STEEL	PAINT GRADE
5	SOLID CORE WOOD	3'-0"x7'-0"x1 3/4"	D	KNOCK-DOWN STEEL	PAINT GRADE
6	SOLID CORE WOOD	3'-0"x7'-0"x1 3/4"	D	KNOCK-DOWN STEEL	PAINT GRADE

DOOR SCHEDULE

MARK	ROOM NAME	FLOOR: SHEET VINYL	FLOOR: SEALED CONCRETE	BASE: 5" SHEET VINYL COVE	BASE: 4" COVE RUBBER BASE	WALLS: GYPSUM BD. (PAINTED)	WALLS: 4' HIGH FRP WAINSCOT	CEILING *: 2'x4' ACOUST. LAY-IN	CEILING *: PAINTED GYP. BD.
100	EXERCISE ROOM		●		●	●		●	
101	OFFICE		●		●	●		●	
102	OFFICE		●		●	●		●	
103	UNISEX TOILET	●		●		●	●		●
104	SHOWER	●		●		●			●

SHEET VINYL:
MANUFACTURE: ARMSTRONG WORLD INDUSTRIES
SERIES: POSSIBILITIES PETIT POINT
COLOR: 88055 ASH GRAY
HEAT WELD SEAMS. INTEGRAL COVE BASE.
INCLUDE METAL CAP STRIPE AND 1" WIDE RUBBER THRESHOLD TRANSITION, TAPERED

FRP:
MANUFACTURE: KEMLITE-CRANE COMPOSITES
SERIES: FIRE-X GLASBOARD
FINISH: PEBELE GRAIN
COLOR: # 85 WHITE
INCLUDE ALL EDGE MOLDINGS

CONCRETE FLOOR SEALER:
MANUFACTURE: L&M CONSTRUCTION CHEMICALS
PRODUCT: SEALHARD

PAINT:
MANUFACTURE: BENJAMIN MOORE
COLOR: WHITE DOVE-INT ROOM
SHEEN: EGGSHELL

ROOM FINISH SCHEDULE

DOOR AND WINDOW FRAMES
TIMELY PRE-FINISHED STEEL FRAMES S-SERIES, 20 GAUGE OR EQUAL
CASING: TA-8
COLOR: TO BE SELECTED BY ARCHITECT FROM MANUFACTURER'S STANDARD AND CUSTOM COLORS

INTERIOR DOOR/ WINDOW SPEC.

MANUFACTURE: U.S. ALUMINUM
DOORS: 400 SERIES, MEDIUM STILE WITH 10" BOT. RAIL
COLOR: CLEAR ANODIZED ALUMINUM
STOREFRONT: 400 SERIES 1 3/4"X4"

EXTERIOR DOOR/ WINDOW SPEC.

DESIGN ENGINEER'S SEAL & SIGNATURE:

LICENSED ARCHITECT
GARY T. HIPOLITE
No. C13681
January 31, 2017
STATE OF CALIFORNIA

PREPARED UNDER THE SUPERVISION OF:

designua
PLANNING AND DESIGN
12832 Valley View Street | Suite C | Garden Grove | CA | 92845
Phone 714.892-3900 | Fax 714.892-3944

Underground Service Alert
Call: TOLL FREE
1(800) 422-4133
TWO WORKING DAYS BEFORE YOU DIG

REVISIONS

NO.	DESCRIPTION	DATE
PC1	PLAN CHECK CORRECTION	03/30/15
	BID SET	04/10/15

REFERENCES

APPROVED BY:

CITY ENGINEER RCE: DATE:

DATE:	03/09/15
SCALE (H):	
SCALE (V):	
DRAWN BY:	D.L.
CHECKED BY:	G.H.

SHEET TITLE: DOOR-WINDOW SCHEDULE

PROJECT NAME AND ADDRESS:

5414 LA PALMA AVE., LA PALMA, CA

CITY PROJECT NO.

SHEET NO. A4.0

DOOR-WIN.SCHEDULE

SHEET OF

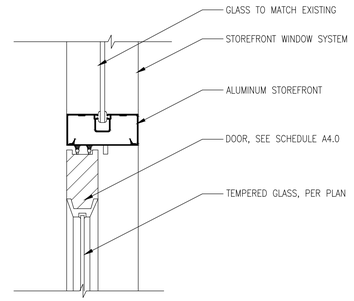

(TYP.) STOREFRONT HEAD/JAMB DETAIL | SCALE: 3"=1'-0" | 6

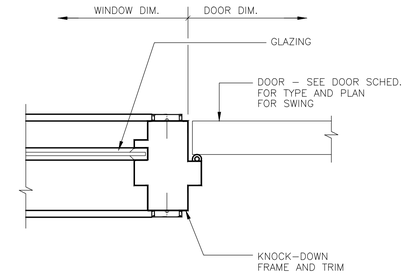

KNOCK–DOWN JAMB AT SIDELITE

SCALE: 3"=1'-0" | 3

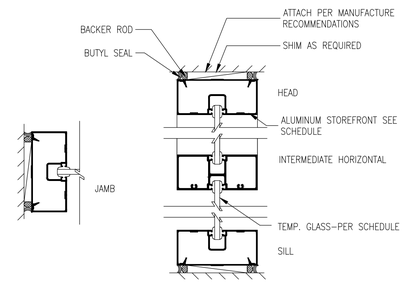

WINDOW MULLION DETAIL | SCALE: 3"=1'-0" | 5

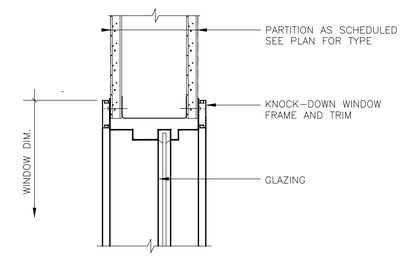

KNOCK–DOWN WIND. HEAD (JAMB/SILL) | SCALE: 3"=1'-0" | 2

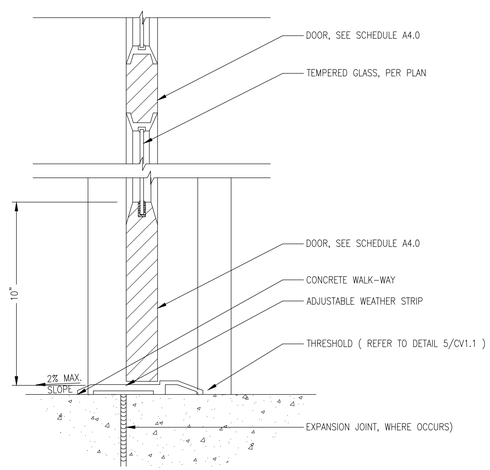

THREDHOLDS TRANSITION | SCALE: 3"=1'-0" | 7

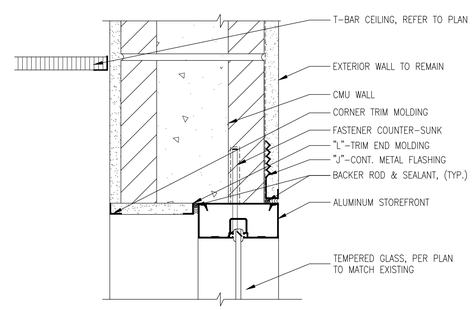

(TYP.) WINDOW HEAD DETAIL | SCALE: 3"=1'-0" | 4

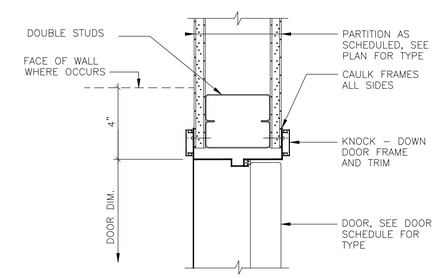

STEEL KNOCK–DOWN DOOR JAMB | SCALE: 3"=1'-0" | 1

DESIGN ENGINEER'S SEAL & SIGNATURE:

LICENSED ARCHITECT
GARY T. HIPOLITE
No. C13681
January 31, 2017
STATE OF CALIFORNIA

PREPARED UNDER THE SUPERVISION OF:

designun
PLANNING AND DESIGN
12832 Valley View Street | Suite C | Garden Grove | CA | 92845
Phone 714.892-3900 | Fax 714.892-3944

Underground Service Alert
Call: TOLL FREE
1(800) 422-4133
TWO WORKING DAYS BEFORE YOU DIG

REVISIONS

NO.	DESCRIPTION	DATE
PC1	PLAN CHECK CORRECTION	03/30/15
	BID SET	04/10/15

REFERENCES

APPROVED BY:

CITY ENGINEER RCE: DATE:

DATE:	03/09/15
SCALE (H):	
SCALE (V):	
DRAWN BY:	D.L.
CHECKED BY:	G.H.

SHEET TITLE: DOOR DETAIL

PROJECT NAME AND ADDRESS:

5414 LA PALMA AVE., LA PALMA, CA

CITY PROJECT NO.

SHEET NO. A5.0
DOOR DETAIL

SHEET OF